PARTS CATALOG

CONTRACT _____

VESSEL DESIGNATION _____

ENGINE NO.
_____

NO. OF CYL 6

BORE 15"

STROKE 19"

TYPE Marine

SPEC. NO. 1503-1

THIS CATALOG ISSUED FOR GENERAL REFERENCE ONLY AND DOES NOT APPLY TO ANY SPECIFIC ENGINE
DO NOT ORDER PARTS FROM THIS CATALOG

ATLAS IMPERIAL DIESEL ENGINE CO.
OAKLAND CALIF. MATTOON ILL.

TABLE OF CONTENTS

The material in the Instructions has been arranged in sections each dealing with a specific subject or subdivision of the engine. The sections are arranged alphabetically and the Titles and main contents are listed below.

	Section	Page In Section
GENERAL ENGINE DATA	A	
FUEL AND LUBRICATING OILS	B	
INSTALLATION INSTRUCTIONS	C	
OPERATING INSTRUCTIONS	D	
LOWER BASE, CRANKSHAFT AND BEARINGS	F	
Main Bearings		
Crankshaft Alignment		
THRUST BEARING	G	
CYLINDER AND LINER, CYLINDER HEAD AND VALVES	H	
Cylinder and Liner		1
Cylinder Head and Valves		1
Air Starting Valves		2
Relief Valves		3
PISTON AND CONNECTING ROD	K	
Connecting Rod Bearings		
CAMSHAFT AND VALVE OPERATING GEAR	L	
Camshaft, Camshaft Removal and Disassembly		1
Camshaft Assembly, Lifters and Push Rods		2
Valve Timing Table, Flywheel Markings		3
Inlet & Exhaust Valve Timing		4
Starting Air Valve Timing		5
FUEL SUPPLY SYSTEM	N	
Fuel Transfer Pump, Day Tank and Filter		
FUEL INJECTION SYSTEM	O	
High Pressure Fuel Pump		1
Fuel Rail and Tubing		2
Fuel Pressure Regulating Valve		3
Spray Valve and Servicing		4
Spray Valve Timing		8
Balancing Engine for Cylinder Load Distribution		9
CONTROL SYSTEM	R	
Control Lever and Valve		1
Latches and Latch Shaft		2
Air Rams and Reversing Rack		3
Interlocking Mechanism		4
Fuel Cut-Out and Control Mechanisms		6
Governor		7
Starting Air Valve, Flywheel Brake		8
Maneuvering the Engine		9
LUBRICATING OIL SYSTEM	T	
Lubricating Oil Day Tank and Pumps		
Lubricating Oil Filter and Cooler		
COOLING WATER SYSTEM	W	
AIR COMPRESSOR	X	
MAINTENANCE AND INSPECTION	Z	
Smoky Exhaust		1
Maintenance Routine		2
Table of Clearances		4
PARTS CATALOG (Sub-Assemblies, Auxiliary Equipment)		

T02-Ed.2-1

GENERAL ENGINE DATA

The Atlas Imperial Diesel Engine described herein is of the heavy duty, solid injection, full Diesel type, designed especially for reliability and a long life of trouble-free operation. It operates on the four stroke cycle, the sequence of operation being as follows:

1st Stroke — On the downward or suction stroke of the piston, the inlet valve is open and pure air is drawn into the cylinder through the air inlet manifold.

2nd Stroke — On the second or compression stroke, this air is compressed to about 400 lbs. per square inch, the heat of compression raising the air temperature to a point above the ignition temperature of the fuel. Just before the piston reaches top center, the injection is completed shortly after the piston has passed the top dead center.

3rd Stroke — On the power stroke the injected fuel oil burns, increasing the pressure within the cylinder, and driving the piston down through its working stroke. Shortly before bottom center position is reached, the exhaust valve opens.

4th Stroke — As the piston returns toward the head, the burned gases are discharged through the exhaust valve, and as the piston reaches top center the exhaust valve is closed, the inlet valve is opened, and the cycle is repeated.

The following data apply to this six cylinder Model 6HM3358 marine engine.

BORE	15
STROKE	19
Rated Operating Speed	300 R.P.M.
A.I.D.E. Co. Engine Rating	600 H.P.
B.M.E.P. at Engine Rating	78.7 lbs./Sq.In.
Piston Speed	950 Ft./Min.
Firing Order "Ahead" (No. 1 cylinder is on the forward end)	1-4-2-6-3-5
Weight of Engine including Flywheel	76000 lbs. (Approx.)
Weight of Cylinder Head Assembly	860 lbs. (Approx.)
Weight of Piston and Connecting Rod (crankpin bearing not included)	730 lbs. (Approx.)

PRESSURES:

Lubricating Oil Pressure	35 to 50 lbs./Sq.In.
Cooling Water (at pump discharge)	20 lbs./Sq.In. MAX.
Fuel Oil (at transfer pump discharge)	10 lbs./Sq.In. MAX.
Fuel Oil (in rail)	1500 to 5500 lbs./Sq.In.
Starting Air Pressure	125 to 250 lbs./Sq.In.

TEMPERATURES:

Cooling Water (Engine Outlet) - direct cooling - - - - - 125° F. Max.
Cooling Water (Engine Outlet) - Indirect cooling- - - 160° F. Max.
Lubricating Oil (Cooler Outlet) - - - - 130° F. Max.
Exhaust Temperature (at full load full speed) - - - 720° F. Max.

DATA FOR ATTACHED AUXILIARIES:

Air Compressor - Single Acting - Two Stage
Bore - 1st stage - - - - - - - - - 8"
Stroke - - - - - - - - - - - - - - $5\frac{1}{2}$"
Operating Speed- - - - - - - - - Engine R.P.M.

Circulating Water Pump - Double Acting
Bore - - - - - - - - - - - - - - - 4 5/8"
Stroke - - - - - - - - - - - - - - 4"
Operating Speed- - - - - - - - - Engine R.P.M.

Bilge Pump - Single Acting
Bore - - - - - - - - - - - - - - - $3\frac{1}{2}$"
Stroke - - - - - - - - - - - - - - $3\frac{1}{2}$"
Operating Speed- - - - - - - - - $\frac{1}{2}$ Engine R.P.M.

High Pressure Fuel Pump - Single Acting
Bore - - - - - - - - - - - - - - - 21/32"
Stroke - - - - - - - - - - - - - - 1-3/4"
No. of Cylinders - - - - - - - - - 3
Operating Speed- - - - - - - - - $\frac{1}{2}$ Engine R.P.M.

Fuel Transfer Pump - Internal Gear Type - Tuthill Pump Co. Model 2CRS Capacity 2.8 G.P.M.

Lubricating Oil Pressure Pump - Internal Gear Type Tuthill Pump Co. Model 5CRSA Capacity 22 G.P.M.

Lubricating Oil Sump Pump - Internal Gear Type Tuthill Pump Co. Model 5CRS Capacity 31 G.P.M.

Sailing Clutch (if used) - Twin Disc Clutch Co. Model E-2-36

FUEL AND LUBRICATING OILS

1. RECOMMENDED FUEL OIL SPECIFICATION

Viscosity	35 to 70 S.U. Seconds at 100° F.
Gravity (A.P.I.)	Minimum 24°
Conradson Carbon (A.S.T.M.-D189)	Maximum 0.5%
Ash	Maximum 0.05%
B.S.&W.	Maximum 0.1%
Sulphur (A.S.T.M.-D129)	Maximum 1.0%
Ignition Quality	40 to 60 Cetane Number or equivalent in other ignition index.

2. EFFECT OF FUEL PROPERTIES ON PERFORMANCE

As adjusted at the factory the engine will operate satisfactorily on fuels with viscosities per above specification. It is possible to use thinner fuels but the operation is apt to be "snappy" and it may be difficult to maintain even cylinder load balance at varying loads. Fuels with viscosities less than 35 S.U.S. may also require special spray tips with smaller orifice holes than standard or the fuel pressure may have to be reduced. On the other hand fuels with high viscosities may require larger spray orifices than standard, increased fuel pressure and in extreme cases longer period of injection. To insure good operation it is recommended that the viscosity be held to the specification.

The gravity is of secondary importance. A minimum of 24° A.P.I. is merely given since heavier fuels generally require special treatment, such as heating and centrifuging, before they can be burned successfully.

The "Conradson Carbon" or "Carbon Residue" in the oil is an index to the amount of carbon which will form in the combustion chamber. Fuels with high "Conradson Carbon" may cause carbon to build up on the spray valve tips to such an extent that the fuel sprays are deflected causing poor operation and smoky exhaust. The higher the Conradson Carbon the more frequently will it be necessary to clean the spray valve tips. Experience also indicates that maintenance costs will be higher when fuels with high "Carbon Residues" are used.

The Ash content of a fuel is a measure of the amount of mineral material it contains. After burning the mineral residues are abrasive and it is consequently important that the Ash content be limited to 0.05%. If the content is higher rapid wear of cylinder liners, pistons and rings will result.

The item B.S.&W. (Bottom Sediment and Water) is an index to the fuel's cleanliness. It is good economy to use clean fuel and store it in clean tanks. Cleanliness in handling the fuel is also important (See paragraph entitled "Importance of Cleanliness in Fuel Handling" in Section N).

When the fuel oil is consumed in the engine Sulphur burns to Sulphur-dioxide. Under normal operating conditions most of this gas is ejected with the exhaust gases. If, however, temperature conditions are low enough, that is, if the engine is idling at low speed and under cold conditions, the sulphur-dioxide gas combines with condensed water vapors to form a corrosive acid which will attack metals used in the engine and exhaust system. It is consequently particularly important to hold the sulphur content low in fuels used for engines subject to variable loads with long periods of idling and also for engines subject to frequent starting and stopping.

The Cetane number of a fuel is an index of the ignition quality. Low Cetane values produce excessive knocking. Excessively high Cetane fuels cause high exhaust temperatures and smokiness of the exhaust.

Although the Flash Point does not affect the suitability of a diesel fuel it is well to specify a minimum of 150° F. since state laws and Classification Societies generally require this minimum. The Pour Point of the fuel should be at least 15° F. below the lowest temperature to which the fuel storage tank is subjected.

3. LUBRICATING OIL

We recommend that a good grade of Marine type pure mineral oil be used in these engines. The oil should be stable under the temperature conditions encountered in the engine and should be resistant to oxidation and sludging. In general, regarding quality of lubricating oil we refer you to a Lubrication Instruction Book which will be sent to any customer or operator requesting it. This book contains some good pointers on the selection and care of lubricating oils.

It is not necessary to use compounded oils, i.e., oils containing additives, inhibitors, anti-oxidants, carbon removers, etc. in Atlas Engines. There are, however, many good compounded oils on the market and these may be used providing extreme caution is exercised and the action of the oil in the engine is observed closely.

When a pure or "straight" mineral oil is used some carbon or other deposits will generally be found in the crankcase and sump tank. The amount of these deposits depend greatly on the quality of the oil which has been used and for good grades of oil the deposits are not excessive and in any way harmful to the engine. The chemicals contained in the compounded oils enable these oils to carry the carbon and other constituents of the usual crankcase deposits in suspension. The compounded oils also have a strong tendency to break loose and carry away any existing crankcase deposits and since there is a limit to the amount that can be carried in suspension clogging of filters and oil lines may result. It is consequently of utmost importance to thoroughly clean out the crankcase, oil lines and sump tank before changing from a straight mineral oil to a compounded oil. As an added precaution we suggest that the first batch of compounded oil be used only for about 25 hours and then drained off. These precautions apply also when changing from one compounded oil to another compounded oil of different make or brand.

If a compounded oil is used the non-corrosiveness of this oil must be looked into very carefully. In this connection the Engineering Dept. of the Atlas Imperial Diesel Engine Co. is available for consultation and they will be glad to advise whether or not an oil is suitable for use in this engine.

With regard to viscosity grade our recommendations are that the viscosity at 130° F. be between 235 and 270 Secs. Saybolt Universal. This corresponds to an S.A.E. viscosity rating of 30 to 40. In other words, the oil to be used should be a heavy S.A.E. 30 or a light S.A.E. 40 oil.

In regard to drainage periods we suggest that the first batch of oil be drained after 100 hours of service. Thereafter the suggested drainage period is 200 to 250 hours. This period may be lengthened somewhat on engines which are equipped with waste packed filters. In that case if the filter cartridge is changed before the oil is badly discolored and loaded up with insolubles or foreign particles, drainage periods of 400 to 600 hours can be used. In the cases where no waste packed filters are used the oil will of course not be "worn out" after 200 hours of service if it is of a good grade. It will, however, be dirty and will contain insolubles which should be removed from the lubricating oil before it is re-used.

The same lubricating oil as used in the crankcase of the engine is also suitable for use in the mechanical lubricator. In the case of the mechanical lubricator, however, it is highly desirable that new oil be used.

INSTALLATION INSTRUCTIONS

1. PREPARING THE ENGINE BED

The success of a Marine engine installation depends greatly upon the construction of the foundation and upon the care exercised in lining up the engine to the propeller shafting. Poor installations will result in excessive vibration and continual change in engine alignment. The result is poor performance and failure of vital parts. For this reason Atlas Imperial Diesel Engine Co. cannot guarantee an engine unless the engine foundation (engine bed) is strong and rigid enough to prevent vibration and changes in alignment.

The importance of rigidity in the engine foundation cannot be over-emphasized and it must be securely fastened to the hull of the vessel so as to be virtually a part of the hull construction. For installations in old hulls, where the rigidity of the hull is questionable, the foundation should be extended fore and aft as far as possible; twice the length of the engine is suggested. Stiffeners should be fitted to prevent the foundation from twisting and weaving. In twin screw installations it is advisable that both foundations be stiffly connected and braced to each other and to the hull. Steel foundations should be welded or riveted. Avoid bolts or screws which may work loose.

When preparing the engine foundation always obtain certified outline prints. Do not use figures or cuts in bulletins or sales literature. The top faces of the foundation must be straight and should be lined up so that they are parallel to the propeller shafting. Athwartships the two top faces should be level. The foundation should be constructed so as to allow 1" to 1½" thick shims or chocks between the engine supporting flanges and the top faces.

2. INSTALLING THE ENGINE

The engine should be lowered onto the foundation and allowed to rest on the leveling screws. For wooden foundations provide steel plates of sufficient area and thickness for the leveling screws to rest on. (Min. 4" x 4" x ½" to 3/4" thick.) Shift the engine sideways until the centerline of the crankshaft lines up with the centerline of the propeller shafting. Then by means of the leveling screws adjust the height until the centerline of the crankshaft exactly lines up with the centerline of the propeller shafting. Also level the base athwartships. When alignment in all planes is at hand the following check should be made.

a. Turning over shaft there should be no binding between the centering spigot and recess of the two coupling halves.

b. The faces of the coupling halves should be parallel regardless of the angle through which either or both shafts are turned. With the propeller coupling half held against the engine coupling half, but not bolted, it should not be possible to insert a 0.003 in. feeler at any point between them. Check at top and bottom and the two sides before bolting flanges together.

If engine has been installed before launching it is advisable to temporarily bolt it to the foundation at this time. It is not advisable to proceed any further before launching unless the hull is extremely rigid. When the vessel is afloat the alignment should again be checked and if found satisfactory a chock should be carefully fitted at each holding down bolt. This applies to steel foundations. In wooden foundations careful measurements should be taken of the distance between the bottom of the engine supporting flanges and the top of the foundation. A continuous wooden shim should then be prepared and this shim should exactly fit the space between the foundation and the engine supporting flanges. The shims should be at least as wide as the supporting flanges.

After the engine is resting on the chocks or wooden shims it is advisable to check that the foundation is supporting the engine evenly over the entire length. This is best done with a #696 Starrett Strain Gage. Check the distance between the inside faces of the crankwebs with the corresponding crank on upper and lower centers. (See figure in Section F for strain gage location.) Readings for any one crank should not differ more than .003". Distortion of the last two cranks only indicates that the crankshaft is out of line with the propeller shafting. (When making this check the engine and propeller shaft couplings should be bolted together.) Check the last two cranks in the two horizontal positions also. If misalignment or uneven support is indicated determine the cause and correct.

When the final alignment has been accomplished permanent foundation bolts should be fitted. For steel foundations drill and ream for fitted bolts. Spaces between the foundation bolt chocks can ther be filled with type metal.

3. SERVICE PIPING

Plan all piping carefully and use as short and direct lines as possible. To improve the general appearance of the installation, piping should be laid below the engine room floor when it is possible to do so. Removable floor plates should be provided and care should be taken that all piping is accessible.

4. FUEL AND LUBRICATING OIL PIPING

See Section N for pipe sizes and arrangement of the fuel day tank. See Section T for lubricating oil day tank connections. Pipe sizes are stated in these Sections. Provide drain valves and vent valves where necessary and remove all scale and dirt from pipes and fittings before installing.

5. COOLING WATER PIPING

Locate the sea chest far enough below the water line to prevent uncovering when the vessel rolls. It should be provided with a coarse grating. Inside the hull a strainer of ample size should be provided with gate valves on each side so that it can be isolated for cleaning. For engines equipped with centrifugal circulating water pumps it is particularly important that the resistance in the sea chest, strainer and piping be as small as possible. Use as few bends as possible and do not make either suction or discharge piping longer than necessary. Locate the overboard discharge not more than 3' above the water line. All valves should be gate valves - not globe valves. Use pipe sizes called for on the outline drawing.

6. STARTING AIR PIPING

Air tanks should conform to A.S.M.E. specifications and should have ample strength for 250 lbs. per square inch pressure. Each tank should be equipped with a safety valve and a globe valve for isolation. A drain valve should also be provided at the lowest point and this valve should be accessible.

Tanks should be connected to the engine starting air header using the pipe size called for on the outline drawing. Provide a globe valve next to the engine. All valves and fittings should be of heavy pattern for at least 250 lbs. per sq. inch pressure. The air compressor on the engine should be connected to the tanks with pipe of the size called for on the outline drawing and valves and fittings of heavy pattern. The air compressor discharge pipe should preferably be run to the air tank. It should not be connected to the piping between the tank and the starting air header. Air compressor unloader should preferably be connected to the tank with its own piping or tubing. Under no circumstances should it be connected to the compressor discharge line.

7. EXHAUST SYSTEM

All exhaust piping should be installed in the shortest and most direct manner possible. When bends are necessary use long sweep fittings. Use the pipe size called for on the outline drawing for lengths up to 20' containing a maximum of three bends. For 3 to 6 bends increase the pipe to the next nominal size and for each additional 30' length increase by one pipe size.

In order to protect the engine and piping from undue strains a length of flexible metal tubing should be installed as near to the engine as possible. It is also recommended that flanged connections be used for ease of dismantling and cleaning. For twin screw installations it is recommended that separate exhaust lines be used. If exhaust lines are combined and only one engine is running, soot and carbon will be blown into the other engine through the open exhaust valve.

OPERATING INSTRUCTIONS

Before the operator attempts to run the engine, he should carefully study the chapters dealing with the mechanical details, especially those of the Control System. After familiarizing himself with the principles of the control mechanism, the operator will understand the significance of each movement of the control lever and will be able to handle the engine intelligently. In the following only a brief description of the proper method of operating the engine and controls is given.

Observe the construction of the control lever noting the manner in which the latch engages the slots in the latch plate. Depressing the latch button in the end of the handle disengages the latch so that the control lever may be moved. Depressing the knob on top of the control lever and turning it holds the latch in the disengaged position. This locking out device is to be used only on that control lever, (engine or pilot house control stand), which is not used for maneuvering the engine. The latch on the control lever by which the engine is being operated should always be free and under control of the operator.

TO GO AHEAD FROM STOP (See Fig. D-1)

(a) Depress the control lever handle button and move the lever to position "B" just below "SLOW". The air ram will then shift the latch shaft and latches to the Ahead position if they are not already in this position. Watch the pointer on the reversing rack handwheel hub. When it is pointing straight up the shifting to "AHEAD" has been accomplished.

(b) Then move the control lever to "START", position "D". The engine will then turn over in the ahead direction of rotation on starting air. (If the control lever was moved to position "D" too fast and the air ram did not have time to shift the latch mechanism it would be stopped from further downward movement in position "C". If this should happen move the lever back slightly.)

(c) As soon as the engine has reached maximum cranking speed depress the handle button and move the lever to "FAST" or to some point between "FAST" and "SLOW" as required.

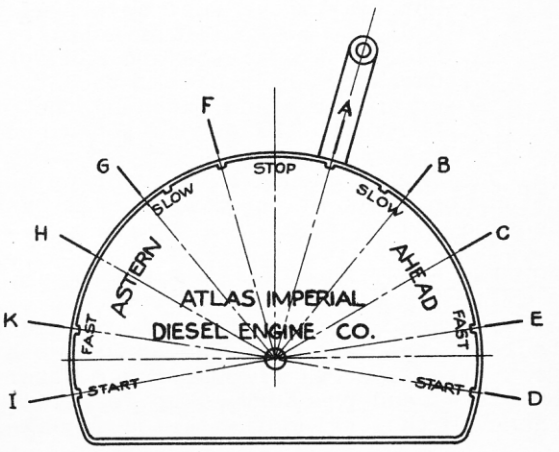

FIG. D-1

TO STOP THE ENGINE

Move the control lever to either of "STOP" positions "A" or "F".

TO REVERSE THE ENGINE (See Fig. D-1)

(a) Depress the control lever handle button and move the handle to either of "STOP" positions "A" or "F". HOLD THE LEVER IN THIS POSITION UNTIL THE ENGINE HAS STOPPED.

(b) Move control lever to position "G". Hold until air ram has shifted latches to "ASTERN". (Pointer on reversing ram handwheel hub is down.)

(c) Depress handle button and move lever to "START".

(d) When engine has reached sufficient cranking speed move control lever to "FAST", position "K", or to some point between "FAST" and "SLOW".

INITIAL STARTING AND STARTING AFTER PROLONGED SHUTDOWN

(a) A final check should be given all fuel, air, lubricating oil and water lines, giving attention to the location and position of shut-off valves, check valves, etc. It is well to trace each system through making sure that there are no short circuits or blockages.

(b) For the initial starting it is well, although not absolutely necessary, to fill the pressure lines and passages of the lubricating oil system. For this purpose a small hand operated gear pump or piston pump can be used. When the pressure lines are full, a slight pressure will register on the pressure gauge. This procedure will insure lubricating oil pressure immediately upon starting.

(c) Hand oil the engine at all the points listed under "4-HOUR ROUTINE" in the

"Maintenance & Inspection" Section. Fill the mechanical lubricator and turn its crank several revolutions.

(d) Open the two small vents on top of the outlet fittings of the high pressure fuel pump and operate the hand priming pump until fuel flows from both of these points. Then close these vents and pump up approximately 1000 lbs. fuel pressure.

(e) See that valves in starting air piping between air receiver and engine are open and that there is sufficient air pressure available. With the spray valve isolating valves shut and with the "snifters" open crank the engine by air until any excess fuel in the combustion chambers has been blown out.

(f) Start the engine by the method described in the preceding sections and run it at "SLOW" ahead. Then immediately check and watch the following:

1. Lubricating oil pressure and circulation. Observe oil level in day tank. Engine will absorb several gallons when started up.
2. Circulation of cooling water. Do not run the engine longer than 2 minutes or at high speed unless water circulation has started. In some instances priming of the water pump will be necessary but do not prime until the engine is cool.
3. Oil and water leakage from external lines and fittings.
4. Hot bearings. Feel covers at intervals to locate any hot areas which would indicate hot oil from a hot bearing.
5. Feel water jackets and manifolds for even water circulation.
6. Check the response of the fuel pressure relief valve by moving the handle up and down and watching the pressure gauge.
7. Listen to the engine for evenness of firing and mechanical knocks.

(g) The engine should be brought up to full speed and load slowly. Run at each control notch for at least one minute. At each speed the items listed under (f) should be checked.

ROUTINE STARTING

Always check the positions of oil and water shut-off valves and make certain that no tools or the levers in the barring-over brackets have been left where they can interfere with flywheel or shafting. After starting up check water circulation, lubricating oil level and pressure. The formation of a habit of checking these items automatically whenever the engine is started is likely to prevent accidents and serious damage.

RUNNING

The following items should be watched and regulated if necessary:

(a) Oil Pressure. The lubricating oil pressure should be maintained between 35 lbs. per square inch and 50 lbs. per square inch.

(b) Cooling Water Temperature. For Seawater cooling the outlet temperature should not exceed 125° F. If a Fresh Water cooling system is used the outlet temperature may safely reach 150° F.

(c) Fuel Pressure. The fuel pressure should be varied with the engine speed. At "FAST" a pressure of around 4500 to 5500 lbs. per square inch will give the best results. However, as the speed is reduced the fuel pressure should also be lowered to prevent too great a withdrawal of the wedges. Too high a fuel pressure at low speeds causes very short injection periods resulting in roughness and uneven engine operation.

(d) Lubricating Oil Temperature at the outlet of the oil cooler should not exceed 130° F.

(e) Mechanical Lubricator. The feed from the mechanical lubricator should be adjusted to approximately 20 drops per minute per feed.

(f) Exhaust Temperature. The normal full load and speed exhaust temperatures range from 700 to 720 degrees. If the temperatures for all cylinders are above these limits the propeller is overloading the engine and should be changed. If the exhaust temperature for any one cylinder is too high or too low the injection system is probably at fault. (See section on "Smoky Exhaust" under "Maintenance & Inspection".)

(g) Exhaust Appearance. Observe the exhaust appearance. If it is smoky investigate the cause. In most cases the spray valves are responsible for smoke. (See section on "Smoky Exhaust" under "Maintenance & Inspection".)

LOWER BASE, CRANKSHAFT AND BEARINGS

1. BASE AND CRANKSHAFT

The cast iron base carries the main bearing saddles and the main lubricating oil manifold from which oil is piped to each main bearing and to the intermediate gear bearings. The crankshaft turns in babbitt lined steel backed bearing shells, held in place in the base by the main bearing caps. Adjustment is by shims, and running clearances should be .0008" to .00095" per inch of shaft diameter when bearings are fitted.

2. MAIN BEARING ADJUSTMENT

Bearing clearances can be accurately measured with two pieces of lead wire of about .025" diameter and one inch long, which are compressed between shell and journal about 1" from each end of the bearing by tightening the cap bolts. The thickness, measured with a micrometer, is the running clearance. Clearances should be checked annually, and should not be allowed to exceed .0015" per inch of shaft diameter. Keep shims even on both sides.

3. MAIN BEARING SHELLS

The bearing shells are prevented from rotating in the base by the shims, and are located fore and aft by a square head dowel pin in the bottom of the bearing saddles which engages a circumferential groove around the outside of the shell. As fitted the shells project above the base and face of the caps from .002" to .003" on each side, but are squeezed down flush when the capnuts are pulled up. There should not be any appreciable clearance between the base, shim, and cap after final tightening. The bearing shells and caps are all numbered and must always be replaced in the bearing from which they were removed. Never interchange them, either from one bearing to another, or from top to bottom.

4. REMOVAL AND ASSEMBLY OF MAIN BEARINGS

After removing the cotter pins and main bearing nuts, the cap, upper shell and shims may be lifted out. As this operation is performed the positions of the numbers stamped on each of these parts should be noted so that the parts can be reassembled in their proper positions. Unless the bearing is considerably worn it may not be possible to remove the lower shell by hand and it is usually necessary to turn it out of the base by barring the engine over after inserting a capscrew in the oil hole in the journal. The head of the capscrew will contact the edge of the bearing shell and roll the bearing out with the journal.

When assembling the main bearing shells care must be taken to keep all parts absolutely clean. It is of utmost importance that any dirt be prevented from lodging between the shell and the saddle. Extreme care must be exercised in locating the bottom shell in a fore and aft direction before turning it into the base. Misalignment will cause the groove to miss the dowel pin in the base and trouble will then be encountered in backing the shell out again for another try.

5. CRANKSHAFT ALIGNMENT

The crankshaft should be checked at annual overhauls, or at intervals not greater than 7000 service hours, for misalignment due to uneven wear of the bearings. When the engine was erected at the factory the bearings were carefully scraped in, so as to bring the bearing surface of all shells in line. If one of these surfaces, due to uneven wear, becomes lower than the adjacent shells, it is evident that the crankshaft will be bent each time the adjacent cylinders fire and the connecting rods force the journal down against this low bearing. This condition must be guarded against, as neglect or ignorance of it will ultimately result in a broken shaft.

The simplest way to check crankshaft alignment is by means of a bridge gauge, which can be supplied with the engine as extra equipment. If a bridge gauge is desired it must, however, be ordered when the order for the engine is placed. It can not be supplied later.

With the bridge gauge straddling the journal and resting firmly and squarely on the bearing cap seats in the lower base the distance between the top of the main bearing journal and the machined face on the bridge gauge is measured by means of a feeler gauge. At the time the engine was erected these measurements were taken and were stamped on the bridge gauge. As the age of the engine increases the bearing surfaces will wear, with the result that these measurements will gradually increase. As long as they all increase by the same amount the shaft will still be in line

however, and there need be no worry, even though they do not agree with the original readings stamped on the bridge gauge. But if at any time the reading for one bearing is found to be more than .004" greater than those for the adjacent bearings, this low shell should be replaced at once and the crankshaft re-aligned, a job that should be undertaken only by an experienced mechanic. A careful record should be kept of all bridge gauge readings taken from time to time.

The bridge gauge measurements described above should be made successively, removing one bearing cap at a time and replacing it before proceeding to the next bearing. When making measurements the crankshaft journal must be forced down against the shell by means of a jack bearing against the centerframe. Protect the shaft journal with a piece of wood or sheet copper. An indication of low bearing shells will usually be given by looseness of the shell in the saddle. If it is possible to freely rotate one of the lower shells by hand when adjacent bearing caps are bolted down, it is quite probable that this shell is unduly worn and it should be checked with the bridge gauge at once.

If a bridge gauge is not available, crankshaft alignment may be checked with a gap or strain gage as follows: Stamp two center punch marks as shown in Fig. F-1 on all cranks. Starting with No. 1 cylinder crank remove adjacent main bearing caps and locate the crank as near lower center as gap gage will permit. Using jack screws between bearing journal and center frame force shaft against lower bearing half (protect shaft with a piece of wood or sheet copper) and record the gap gauge reading. Then loosen jackscrews and bar over until crank is on upper dead center. Again tighten jack screws and record the gauge reading. Repeat on all other cranks.

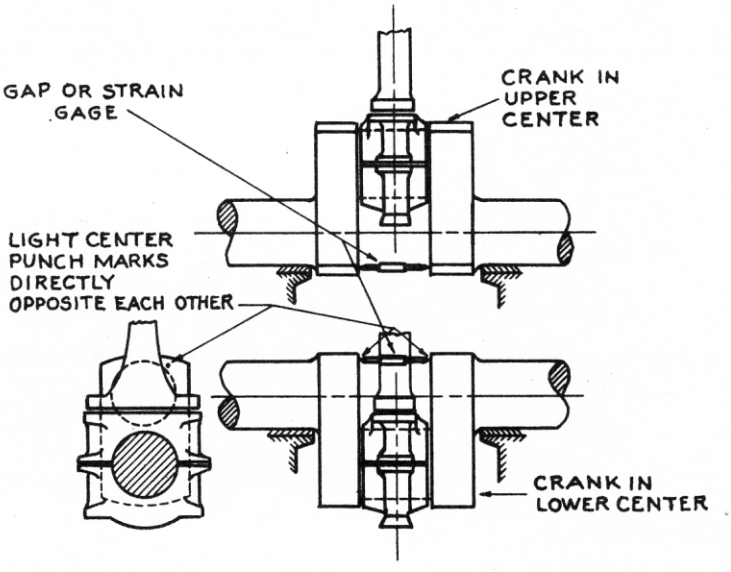

FIG. F-1

Comparison of gauge measurements in upper and lower centers will indicate crankshaft alignment conditions. Normally the measurements for the cranks in top position are slightly larger than measurements for the same cranks in the bottom position. However, the difference in measurement for any one crank should not exceed .0005" per inch of shaft diameter. If this is the case, realignment of the crankshaft bearings is indicated.

THRUST BEARING

1. MULTI-COLLAR TYPE

All loads in a fore and aft direction resulting from propeller thrust are carried by the thrust bearing. This bearing is located aft of the flywheel on pads at the end of the lower base. Water jackets are provided in the bearing castings and a small supply of cold water is bled from the main water inlet manifold to the bearing. A positive supply of oil is fed to the bearing from the mechanical lubricator located at the forward end of the engine.

In general the thrust bearing assembly consists of three parts: the bearing, the cap and the thrust shaft. Both the bearing and the cap are water jacketed. Each contains dovetailed circumferential grooves which when lined with babbitt about $\frac{1}{4}$" thick form grooves for the thrust shaft collars. Between the grooves the cylindrical areas are also lined with babbitt so that sufficient journal area to carry a substantial radial load is incorporated in the bearing.

In the erection of the engine at the factory the thrust bearing is treated as if it were an additional main bearing. After all the lower main bearing shells have been scraped into alignment the thrust shaft is bolted to the crankshaft and tested for trueness. It is required that the total run out of the thrust shaft at the aft end does not exceed .002". In the meantime the thrust bearing (lower half) is installed temporarily on the base. The thrust shaft is then coated with blueing and the whole shaft assembly is lowered into position. The bearing is then shimmed up or down, moved forward or backward, to one side or the other and scraped until the bearing is satisfactorily located. The finished bearing must be in line with the main bearings. The thrust shoulders on the shaft must be a close fit in the grooves but at the same time have clearance. An end play of approximately .005" to .010" is desirable. The location of the bearing should be such that the crankshaft is slightly aft of its central position in the base since the normal wear on the thrust bearing will allow the crankshaft to move forward slightly.

When the foregoing conditions have been met the thrust bearing (lower half) is doweled to the base. The thrust bearing cap is then scraped in and adjusted for clearance with shims.

2. KINGSBURY TYPE

Referring to Fig. G-1 the standard style GH Kingsbury thrust bearing is equipped with two pairs of thrust shoes (3) (two shoes for ahead and two for astern thrust). These shoes are individually adjustable fore and aft by jackscrews (5) which are locked by lock wrench (6). A journal bearing, babbitted directly in lower thrust bearing housing (1) and upper housing (2) is also incorporated. The journal bearing is located on the flywheel end of the thrust bearing.

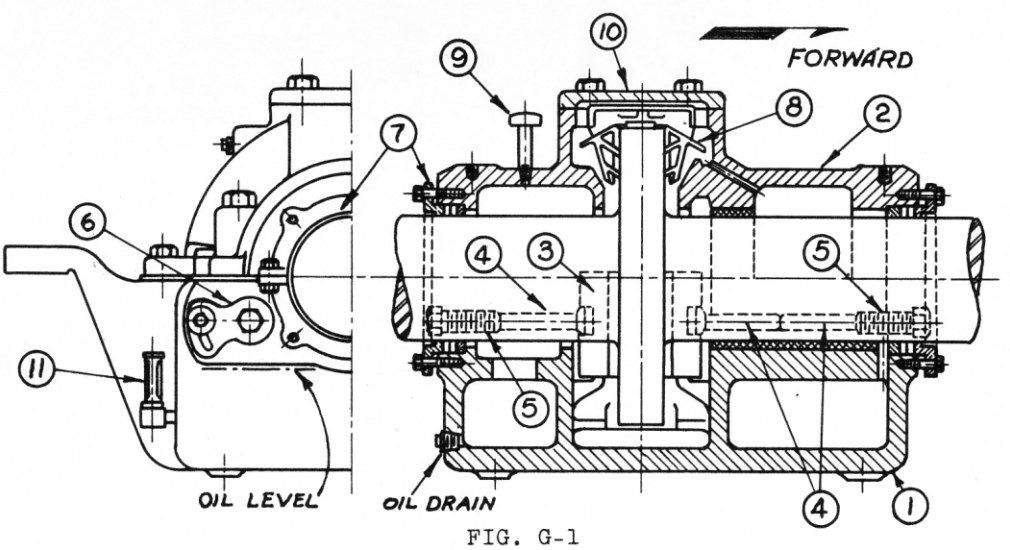

FIG. G-1

There is only one thrust collar which is forged integrally with the thrust shaft. Lubrication is self-contained and automatic. The lower housing contains the lubricating oil supply, the oil level being of such height that the lower part of the thrust collar dips into it. The oil is then carried to the top where scraper (8) distributes it over the collar thrust surfaces and takes off some oil for lubrication of the journal bearing. Oil is retained in the bearing by stuffing boxes at

both ends. Do not take up hard on stuffing box glands (7), as this will cause unnecessary heating of the shaft.

To allow for oil films between thrust bearing surfaces, and for expansion by heat, it is strictly necessary to provide longitudinal end play in accordance with the following table:

Engine Bore	End Play
14½ and 15"	.017"
13"	.015"
11½"	.014"
10"	.012"

Using the jackscrews, adjust for end play as follows: Keeping thrust collar in desired fore and aft position, set up firmly on forward-end jackscrews so ahead shoes will bear equally against collar. Lock the screws. Next set up on after-end jackscrews, using a "feeler" gauge, with thickness equal to end play, back of the pivotal support of each shoe. Lock the jackscrews and remove the "feelers".

For average installation of propeller thrust bearings, a heavy turbine or engine oil should be used. The oil should be chosen with due regard to viscosity. If it is too light, the lubricating film may be dangerously thin. If it is too heavy, the friction is needlessly high. Specific advice as to proper viscosity for any definite installation is regularly marked on bearing nameplate. As a rule the viscosity should be about 200 seconds Saybolt at operating temperature of the oil bath. The oil must be clean and free from grit and other injurious substances. Fine grit has a scouring action and may gradually wear down the bearing surfaces. Poor oil may cause corrosion. Oil of good quality does not "wear out" by use in these bearings, but lasts indefinitely if not contaminated.

<u>It is vitally important to maintain the oil at a suitable level.</u> Oil level plates are attached to both sides of housing, with "High" and "Low" oil levels noted. If necessary fill housing with oil to "High" mark when not running. A slight draw down of oil level will be noted when bearing is running. Occasionally oil should be added to make up for leakage and evaporation. Be sure the make up oil is clean. The air vent holes (9) should be kept open. Oil gauge (11) may be placed on either side of housing.

CYLINDER AND LINER, CYLINDER HEAD AND VALVES

1. CYLINDER

The individual cast iron cylinders are secured to the centerframe and base by four studs which are screwed into the base adjacent to the main bearing saddles. The cylinders are located transversely and are aligned to the centerframe by machined pads along one side which register with a step on the top of the centerframe. Crankcase sealer is used between the cylinders and the centerframe. If this joint is disturbed the old sealer must be scraped off and replaced by fresh sealer before tightening the cylinder nuts. Glyptal Lacquer is recommended for sealer.

2. CYLINDER LINER

The cylinder liners are special alloy iron castings, heat treated to relieve stresses and secure correct hardness. They are accurately machined to close tolerances and should be handled carefully and care taken not to damage the fits at top and bottom. Spare liners should always be stored in a vertical position and should be securely fastened down if stored on board ship. The water seal at the bottom of the liner consists of two rubber grommets which should always be replaced with new ones whenever a liner is pulled. When lowering a liner into place, grease the grommets freely with cup grease and use care to enter the grommets into the cylinder fit or they may be pinched and damaged. The liner has from .004" to .007" clearance in the cylinder at both top and bottom fits and no difficulty should be encountered in installing a new liner. A paper gasket .010" thick is used for the upper water seal between the liner and cylinder and a new gasket should always be used when replacing a liner. The fits and shoulders on both liner and cylinder should be carefully scraped and wiped clean to assure a water tight joint. Care must be taken not to damage these shoulders, as a water leak will result.

A copper gasket, 1/32" thick, forms the gas seal between the liner and the head. The gasket and both sealing surfaces must be carefully wiped free of all dirt when assembling.

3. CYLINDER HEAD

The individual cast iron cylinder heads are carefully designed to assure uniform cooling and accessibility of the water jackets. Depending on the engine model two or three large cleanout covers are provided.

On engines with 11½" bore or larger positive cooling of the spray valve bosses is assured by nozzles projecting into the water jackets and discharging cool water directly against them. Water is supplied from a manifold located close to the exhaust manifold and fed at the center from the water inlet manifold. A globe valve is provided in the connecting line for temperature control.

The cylinder head is centered by means of a spigot which engages the bore at the top of the cylinder liner. The face of this spigot bears upon the copper gasket forming the gas seal. Brass bushings screwed into the cylinder and extending up into the head carry the cooling water. They are sealed by rubber grommets.

When a cylinder head is removed it should be placed on wooden blocks, never on concrete floor or steel deck. The rubber grommets should always be replaced by new ones and all dirt should be wiped from the bottom of the head before it is lowered onto the cylinder.

4. INLET AND EXHAUST VALVES

Two types of intake and exhaust valves are used on Atlas Imperial Diesel engines. One may be termed one-piece forged type and the other two-piece cast head type.

The two-piece cast head type consists of a valve head cast of special heat resisting alloy iron and a steel stem which is screwed and riveted to the head. Inlet and exhaust valves of the two-piece construction are interchangeable and the same valve may be used for either intake or exhaust.

On engines where valves of the one-piece forged type are used the exhaust valves are of a special heat resistant alloy steel and may be distinguished from the inlet valves by the "EXH." and "INL." stamped on the valve heads. The inlet valves are forged of chrome nickel steel and are not suitable for exhaust valves. The one-piece valves should never be used interchangeably except in an emergency.

In engines with 10½" or smaller bore the valves seat directly in the head. Renewable guides are pressed into the head. Engines with 11½" or larger bore have

both inlet and exhaust valves mounted in cages, bushed with renewable guides. The exhaust valve cage is water jacketed. Connections in the cooling water pipes must be broken when the exhaust cage is pulled. Exhaust cages must be pulled and water jackets emptied if engine is permitted to stand for any length of time in freezing weather as they will not empty from the main engine drain.

The cages are secured to the head with studs and are provided with jacking holes to facilitate their removal. Two jack screws are furnished with the tool equipment for this purpose. The cages are sealed against the head with copper gaskets at the bottom and cast iron piston rings installed in grooves above the port openings seal the cages at the top.

Depending on the engine model one or two concentric springs are used per valve. On the larger engine models the springs are held in place by a retainer which is secured to the valve stem by means of a split taper collar. Depressing the spring retainer against the springs permits the removal of the split collar and the disassembly of the valve and cage. On engines with 10" bore the upper end of the valve stem is threaded and spring retainers are held in place by a nut and locknut. On this engine model the length of the spring in place, with the valve closed, should be 4-3/16".

If the renewable valve stem guides are replaced they should be reamed after pressing in place with a standard reamer which produces a hole with a diameter to size or .0005" oversize. For instance, the 13" bore engine uses a valve with a stem diameter of 7/8". A standard 7/8" diameter reamer should then be used after the guides have been pressed into place in the cages. This reamer should then produce a hole with a diameter of .875" to .8755".

When grinding valves mounted in cages it is recommended that the cages be bolted into place in a cylinder head. A spare head may be used, or if a machine shop is available a sturdy fixture can be made up duplicating the cage bore in the head. The clamping nuts holding the cage to the head or fixture should be pulled up to approximately the same tension as when assembling in the engine. In this way any distortion of the cage and seat due to the clamping when the cage is in place will be duplicated while the valve is being ground, and a perfect seat will be assured. It will be found that this practice will practically double the interval between valve grindings. Always finish the grinding with fine compound, and take particular care not to get any grinding compound into the guide. Thoroughly clean all traces of the grinding compound from valve and cage before reassembling.

Lubricate valve stem with clean engine oil before placing in guide. If valve faces are badly pitted they should be refaced in a lathe, as excessive grinding to remove pits will wear down the seats in the cages unnecessarily and will also cut a groove in the valve face. Badly pitted seats should also be refaced before grinding. Care must be taken to keep the seat concentric and square with the bore of the guide.

5. AIR STARTING VALVE (Engines with 13" to 15" bore)

The poppet type starting air valve, illustrated in Fig. H-1, is actuated from the camshaft by means of a lifter, pushrod and rocker, and is rendered inoperative while the engine is running by a pneumatic piston arrangement between the top of the valve stem and rocker. Fig. H-1 shows the device in the inoperative or cutout position, as it is when the engine is running. Valve (2) is held closed against its seat by spring (4), and piston (6) is down against cylinder (5), held so by a spring under the lifter. This spring holds the lifter and its latch up clear of the camshaft, so that as the cam rotates it does not contact the latch roller. (See description of latches under paragraph 28.) The pushrod is raised, rotating the rocker and holding piston (6) down against the cylinder as shown.

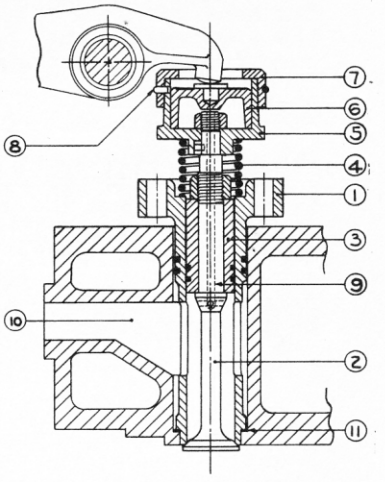

FIG. H-1

When the engine is to be started, starting air from the manifold enters port (10) and passes up through the drilled hole (9) in the valve stem to cylinder (5) where it raises piston (6) up against stop (7), collapsing the spring under the lifter, and forcing the lifter and latch roller down against the cam. As the camshaft then rotates piston (6) remains up against stop (7), the air force against the bottom of the piston being greater than that of valve spring (4) and the spring under the lifter,

and the valve follows the motion of the cam, admitting starting air to the cylinder at the proper intervals. When the master valve in the starting air manifold closes and the pressure in the manifold drops, piston (6) is returned to its position against cylinder (5) by the lifter spring, and the valve remains closed.

Referring to Fig. H-1 the valve assembly is contained in cage (1) which is sealed to the head by copper gasket (11) at the bottom and by piston rings at the top and is held in place by two studs. Bronze bushing (3) works in the cage and is sealed against the starting air pressure by two piston rings. Stop (7) is threaded onto piston (5) and is locked in place by snap ring (8), the end of which is bent in and projects into a drilled hole in the cylinder. If either stop or cylinder are replaced this hole must be drilled in the cylinder, in line with the hole in the stop when the two parts are screwed tightly together. Use a 13/64" drill. The piston travel should be from .300" to .330", and may be adjusted by facing off the top of either the cylinder or the piston.

If the engine has been running or has been shut down for a considerable period of time and a period of maneuvering is anticipated, it is advisable to give the automatic air starting valves in the cylinder head a few drops of penetrating oil. Make sure that they are not stuck and squirt a little penetrating oil between the spring coils so that it will follow the stem down and lubricate bushing (3).

6. AIR STARTING VALVE (Engines with 10" to 11½" bore)

On the smaller bore engines the starting air rocker is mounted eccentrically on the rocker shaft. When starting the engine an air ram described in Section R turns the rocker shaft and lowers the air start rocker until contact is made with the air start cam. Consequently on these engines the pneumatic piston arrangement described in paragraph 5 is not needed and is omitted, the rocker bearing directly on the valve stem. On 11½" bore engines the valve is mounted in a cage similar to that shown in Fig. H-1, while on the 10" bore engine the valve is guided and seated directly in the head. Hand oil the air start valves occasionally as described in paragraph 5.

7. PRESSURE RELIEF VALVES

Either two or three pressure relief valves are provided for each cylinder, located near the bottom of the head on the operating side of the engine. These include a manually operated relief or "snifter valve", a spring loaded safety valve, and on engines equipped with the automatic control system a pneumatically operated relief valve. If used, this valve is described in detail under the "Control System", Section R.

The valves are mounted in a tee screwed into the cylinder head. On standard engines without the pneumatic valve the snifter valve is in the top of the tee pointing up and the safety valve in the bottom. When the pneumatic valve is used it points down, the safety valve up and the snifter valve projects out from the end of the tee.

8. SNIFTER VALVE

The hand operated relief or "snifter" valves are small needle valves for release of the compression when barring over the engine. They are also used as shut-off valves when indicating or taking compression pressures.

9. SAFETY VALVE

The safety valves are spring loaded relief valves for the purpose of relieving excessive cylinder pressures. They act as telltales to indicate that the pressure is too high, and the popping of these valves is a definite indication that something is wrong and should be investigated at once. The valves are adjustable by tightening the spring retaining cover, and should be set to relieve at 800 lbs. per square inch. A setscrew locks the cover to maintain the setting. They should be tried out occasionally by prying up the lower spring washer with a screw driver to assure that they are in operating condition.

PISTON AND CONNECTING ROD

1. PISTON

The pistons which are of the one-piece, solid-skirt type are made of high grade cast iron and are heat treated to relieve stresses and to obtain proper hardness. The piston is ground straight, that is without taper, from the bottom up to the ring belt. The clearance in the liner is .001" per inch of bore diameter. Due to manufacturing tolerances the total clearance of the piston skirt may vary .001" up or down from the above value. For example: the piston skirt clearance in a 13" bore engine should be between .012" and .014". The head of the piston being exposed to high temperatures is given a larger clearance, approximately .0055" to .006" per inch of bore diameter.

2. PISTON PIN

The case hardened and ground piston pin is stepped, with differential fits in the piston pin bosses. The fits are about .0005" to .0015" press on the small end and metal to metal to .0015" loose on the large end. Rotation of the pin in the piston is prevented by the engagement of a dowel which projects radially from the large end of the pin with a groove in the bottom of the boss. A setscrew threaded into the smaller pin boss enters an indentation in the pin to act as a retainer. The setscrew is in turn secured by a locknut.

3. PISTON RINGS

In engines with 10½" or smaller bore there are 6 rings per piston. In engines with larger bores seven rings are used per piston, an oil ring above and below the piston pin and five compression rings. Always assemble the oil rings with the bevel up, to slide over the oil film on the upstroke and scrape it down on the return. When overhauling pistons, thoroughly clean all carbon from rings and grooves and top of piston. Fuel deposit on the piston skirt can best be dissolved with cleaning solvent or paint remover. Be sure oil drain holes below oil rings are open.

Check rings for side clearance in grooves and end clearance, as measured in place in the liner. Side clearance should be .003" to .005" with new pistons and rings and end or gap clearance .005" per inch of bore diameter for the two top rings. For the other rings the gap clearance should be .003" per inch of bore diameter.

Rings should be discarded when the side clearance exceeds .008" and the end clearance .007" to .008" per inch of bore diameter. It is also a good policy to discard any rings which have been stuck for any length of time as they are apt to be out of round and may not hold compression. Always check new rings, measuring the side clearance, in the groove in which the ring is to run, with feeler gauge, and the end clearance with the ring in the liner at the smallest diameter. Never install rings with less clearance than that given above. As the oil rings wear the width of the flat increases, with consequent decrease in width of bevel and oil scraping ability. Experience will determine permissible wear without excessive oil pumping.

4. CONNECTING ROD

The connecting rods are steel drop forgings, rifle drilled to carry oil to the piston pins. Shims between foot of rod and crankpin box provide adjustment to balance compression pressures in the cylinders to the desired value. The distance "X" (see Fig. K-1), between the top of the piston and the top of the liner should be in accordance with the tabulation below.

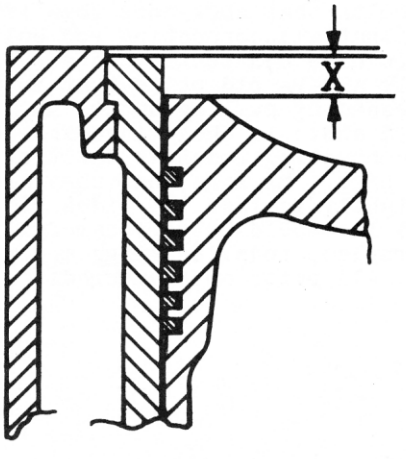

FIG. K-1

Engine Bore and Stroke	Dimension "X"
10 x 13	13/16"
10½ x 13	13/16"
11½ x 15	15/16"
13 x 16	1 1/32"
14½ x 18	1 7/16"
15 x 19	1 3/16"

When taking measurement "X" the piston should be at top dead center and the cylinder liner must be securely clamped down into the cylinder. The cylinder stud nuts must also be tight when making this adjustment. Connecting rod shim adjustment

in accordance with the above tabulation should be used for altitudes from sea-level to 1500' and will then produce compression pressures of 400 to 410 pounds per square inch. If the engine is located at higher altitudes than 1500 feet above sea-level dimension "X" should be smaller than the tabulated values. The Engineering Department of Atlas Imperial Diesel Engine Co. will advise the proper adjustment if the engine serial number and altitude is stated.

A bronze bushing for the piston pin is pressed in the upper end of the rod. If this bushing is replaced it must be reamed to allow a piston pin clearance of .002" to .003" on 10" bore engines and .0035" to .005" on engines with larger bore. Care must be taken to keep the reamed hole exactly parallel with the foot of the rod. The oil grooving in the bushing is carefully designed for correct lubrication, and new bushings must be inserted in rod with the relief grooves on the horizontal axis of the pin. A ball check valve at the bottom of the rod prevents return of the column of oil in the rod on the upstroke. Examine these valves at annual overhauls. The ball lift should not exceed 3/32".

5. CONNECTING ROD BEARINGS

The crankpin boxes are steel castings with babbitt lining centrifugally cast and accurately bored. No attempt should be made to rebabbitt these boxes in the field. New boxes may be obtained from A.I.D.E. Co. and a credit allowance will be made for old boxes returned. Bearing adjustment is by means of shims between halves of bearing. Bearing clearances when adjusted should be .0008" to .0009" per inch of bearing diameter.

Clearances are best measured with a lead wire compressed between bearing and journal, as described in Section F. Keep the shim thickness equal on the two sides. Inspect the bearing surfaces for even bearing. Areas which are not bearing on the shaft will be discolored, and such bearings as well as new ones should be carefully scraped to secure even bearing over at least 3/4 of the entire area. End clearance is .007" to .015" and should not be allowed to exceed .025".

The two crankpin box halves are held together by bolts so that the connecting rods and connecting rod bolts can be removed without disturbing the bearings. On some 13" bore engines the lower base is shallow and at its lowest point the connecting rod box passes close to the lubricating oil header. If the crankshaft in these engines is barred over with the crank pin bearings loose on the shaft be sure to keep the bearings in a vertical position as they approach and pass over bottom center as they will not clear the lubricating oil header below the crankshaft if they are turned appreciably from the vertical. The header may be severely damaged if struck by the crankpin bearing boxes.

NOTE: 15" bore engines built 1941 or later are equipped with loose bearing shells in the crankpin boxes. These shells are bronze backed and care should be taken that backs of shells and bores of boxes are absolutely clean when assembling. The shells project above the faces of the crankpin box halves .003" to .005" but are squeezed down flush when the connecting rod bolts are tightened up.

6. CONNECTING ROD BOLTS

The connecting rod bolts, fitting in reamed holes, hold the two halves of the crankpin boxes together and to the foot of the rod. The nuts should be kept pulled up tightly but not overstressed. They should not be sledged but should be pulled up by hand with a pipe about four feet long on the wrench. It is good practice to keep a record of the length of connecting rod bolts, measured with a micrometer at annual overhauls and to discard bolts that show more than .010" increase in length. It is further recommended that all connecting rod bolts be replaced every two years, assuming the engine to have had continuous service during that time, say 8000 hours or more. It is nearly always old bolts that have been in service for some time and have been overstressed by pulling up the nuts too tightly that fail. Replacing bolts as suggested above is cheap insurance against the possibility of wrecking an engine through connecting rod bolt failure. Replace cotter pins carefully, always using new cotter pins. Be sure that they are a close fit in the hole and bend the ends back tightly against the sides of the nut. If this work is left to inexperienced mechanics it should be very carefully inspected at the completion of the job. Always replace rods, bearings and pistons in the cylinders from which they were removed. All parts are numbered.

CAMSHAFT AND VALVE OPERATING GEAR

1. CAMSHAFT

The camshaft is made of 2½" ground steel shafting. The keyways in the shaft are indexed for the firing sequence stamped on the engine nameplate when the engine is running in the "Ahead" direction of rotation. Number 1 cylinder is located at the forward end of the engine. The high pressure fuel pump crankshaft is part of the camshaft assembly and is bolted to a coupling flange which has been shrunk on and keyed to the forward end of the camshaft.

2. CAMSHAFT BEARINGS

The camshaft bearings are accurately machined cast iron blocks with pressed in bronze bushings. Bearing bore in bushing is reamed to 2.504" - 2.505" diameter which allows a running clearance of .004" to .006". If replaced the bushings must be reamed and oil and mounting holes drilled through after pressing in. A groove must be chipped to communicate with the oil hole if it does not intersect the groove in the bushing. The bearing blocks are held in machined seats cut in the webs of the centerframe and are secured by capscrews.

The camshaft thrust is carried by the two bearings adjacent to the fuel pump crankshaft. These two bearings differ from the other bearings in that the bushings have thrust faces. The faces of the bearings contact faces provided on the shrunk on coupling and fuel pump crankshaft web. The two bearings are adjusted to allow a camshaft end play of .015" to .025". All camshaft bearings are supplied with oil from the force feed lubricating oil system. A header, clamped to the centerframe below the crankpit openings, is provided and this header is connected to lubricating oil filter.

3. CAMS

The cams are accurately ground to shape after being case hardened. The fuel valve cam consists of a case hardened steel disc in which a case hardened steel toe is inserted. This toe controls the action of the spray valve, the disc serving as a base circle. The cams are a sliding or light tap fit on the camshaft and are held in position by taper keys driven securely into place after the cams have been located to line up with the latch rollers properly. The ahead inlet and exhaust cams serve as hubs to which the astern inlet and exhaust cams, the ahead and astern air starting cams and the fuel cam disc are bolted. Elongated holes in the fuel cam disc allow angular adjustment with respect to the hub, permitting exact setting for timing.

4. CAMSHAFT REMOVAL

(a) Disconnect the linkage between engine control and the wedge shaft.
(b) Disconnect lubricator linkage and remove lubricator drive housing. Also disconnect bilge pump connecting rod and remove bilge pump crank and cover.
(c) Remove all covers on camshaft gear housing. Disconnect all internal air piping to the control valve.
(d) Disconnect and remove control lever and valve unit and governor housing.
(e) Disconnect lubricating oil sump pump and fuel regulating valve pipe and tube connections. Camshaft gear housing can then be removed after all screws and nuts to adjacent parts have been removed. (Note- It will be necessary to remove the aft end latch box door and remove all connecting screws and nuts between the camshaft gear housing and latch box.)
(f) Remove forward end latch box door and disconnect forward end centerframe cover. Then remove this cover.
(g) Remove the latch boxes as a unit or in halves as desired.
(h) Disconnect the latch shaft reversing link connecting to the reversing rack. Then remove the latch shaft and latches.
(i) Remove all pushrods and valve lifters. (Valve lifters may be left in place if properly fastened, for example with clamps, so that they will not drop down.)
(j) Disconnect the fuel lines from the high pressure fuel pump and remove the pump housing assembly.
(k) Remove the bearing caps of the high pressure fuel pump connecting rods and remove the crosshead plugs, oil guards, sleeves and guides.
(l) Take out the cam bearing retaining capscrews.
(m) Loosen the cylinder nuts on the camshaft side of the engine.
(n) Remove the camshaft. Sledge each bearing block out of its seat a little at a time using a timber inserted through the openings on the exhaust manifold side. The end of the timber should be placed against the camshaft as close to the bearing as possible. When the camshaft has been partially removed it will be possible to withdraw the connecting rods and crossheads of the fuel pump downward.

5. CAMSHAFT DISASSEMBLY

After the camshaft has been removed from the engine it should be disassembled as follows. The lubricator eccentric is removed either by a suitable puller or by driving with a babbitt hammer. Then, after removing the first cam bearing the clamping bolts of the camshaft gear hub are loosened and the whole assembly slid off. Bearings and cams are then removed successively from the aft end of the camshaft. The cams are loosened by driving the taper keys away from the respective cylinder centers with a drift. The cams should slide freely on the shaft after the keys have been removed, but if it should be necessary to drive them off, only a babbitt hammer or brass drift should be used. Any burrs, particularly at keyways, must be dressed down with a file. If this precaution is not taken the cams may seize as they are removed and forcing the cams the remainder of the distance will score the shaft.

6. CAMSHAFT ASSEMBLY & INSTALLATION

When the camshaft is being reassembled the same precautions with regard to burrs apply. Coating the bores of the cams with white lead will aid materially in sliding the cams into place without scratching the shaft. The bores of either new or old cams should be inspected carefully for any defects likely to scratch the shaft. Bearings and cams are installed successively from the after end but are not keyed to the shaft until later. The hub and cam gear are assembled on the shaft and clamped tightly. The camshaft gear should be located with its aft face $8\frac{1}{2}$" from the end of the shaft.

The assembled camshaft is then installed in the engine. After starting each cam bearing in its seat the bearings are driven into place a little at a time with a heavy brass bar. Each bearing should be driven a little and then left until all the others have been knocked in the same amount so that the camshaft will not be bent. The cam bearings will seat more easily if the cylinder nuts are loose.

The connecting rods and crossheads of the high pressure fuel pump must be assembled as the camshaft is being driven into place. The crossheads should be inserted in the holes in the centerframe before the camshaft has been driven in any appreciable distance. When the camshaft has been partially installed it will be possible to place the connecting rods on their respective cranks. After this last step the connecting rods and crossheads need no further attention as the cam bearings are being seated.

After the cam bearings have been securely bolted, the latch shaft and latches should be installed. The cams are then ready for keying. Starting with Number 1 (forward end) cylinder place each set of cams directly under the proper latch rollers and secure the cams to the shaft by inserting the taper keys. Drive the keys toward the center of the corresponding cylinder. Complete this procedure with each set of cams before going to the next one and work aft from the forward end of the engine.

The engine should next be timed, in accordance with the detailed instructions in Paragraphs 14 to 16 after which the latch box and control parts may be reassembled on engine. For Fuel Spray Valve timing see Section O.

7. VALVE LIFTERS

The steel valve lifters work in cast iron guides bolted to the top of the centerframe and carry case hardened rollers on steel pins on their lower ends. Clearance between lifters and guides is .0015" to .0025", between rollers and pins is .001" to .0025". Roller pins are a light press fit in the valve lifters. After roller pins have been assembled the hole in the lifter should be peened over with a 3/16" wide drift at top and bottom to secure the pin. Dress down the outside diameter with a file if necessary in order to secure a sliding fit in the lifter guide.

8. PUSH RODS

The pushrods for the four rockers are fabricated from seamless steel tubing with steel ends secured by welding. On the fuel valve push rod the upper end is screwed into the tubing then secured by a cotter pin. This is necessary on the fuel push rod in order to assemble the buffer spring and cage assembly. (See Section O).

9. VALVE ROCKERS

The valve rockers are fulcrumed on a rocker shaft which is supported by pedestals at each end. The rockers are bronze bushed at their fulcrums and the bushings are reamed for .0015" to .0035" clearance with the rocker shaft after pressing in. The rockers carry case hardened adjusting screws with spherical ends at the push rod

side. The push rod ends of the rockers are split and clamping screws lock the push rod adjusting screws. The case hardened rollers at the valve ends of the rockers are mounted on pins riveted in the rockers. The clearance of the rollers on the pins should be .001" to .002".

The inlet and exhaust rocker rollers bear on case hardened buttons mounted in yokes which operate the two inlet and the two exhaust valves. The yokes are provided with guide pins sliding in cast iron guides bolted to the cylinder head. These should be hand oiled whenever the valves and rockers are being oiled.

The starting air valve rockers are not equipped with rollers at the valve ends. The ends of these rockers are cast to form buttons which bear directly on starting air valve pistons.

For the construction of the fuel valve rockers see Section O.

10. VALVE TIMING

The correct valve timing for the engine is given in the following table.

Starting Air Valve Opens	5° B.T.C.
" " " Closes	45° B.B.C.
Inlet Valve Opens	5° B.T.C.
" " Closes	35° A.B.C.
Exhaust Valve Opens	35° B.B.C.
" " Closes	5° A.T.C.
Fuel Spray Valve Opens	see engine name plate
" " " Closes	see engine name plate

11. SPOTTING THE PISTON

Before proceeding with the discussion on valve timing the following instructions regarding the correct method of spotting a piston should be considered. Whenever a piston is to be spotted for valve setting it should be brought into position by turning the engine in the direction of rotation in order to take up all gear backlash. In other words, the engine should be turned clockwise facing the flywheel when the ahead valves are being timed and counterclockwise when timing the astern valves. If the engine is turned past the desired position, it should be turned well back in the opposite direction, and then again brought up to the required point. (The above applies to standard port engines with standard rotation.)

12. FLYWHEEL MARKINGS

The position of the piston may be determined from the flywheel pointer and the markings stamped on the flywheel rim. Top center of each piston is marked and stamped with the corresponding piston numbers, and degree marks are stamped for 25° on each side of top center. These markings are sufficient for all valve timings. The intake valves normally open 5° B.T.C. (Before Top Center) and the exhaust valves close 5° A.T.C. (After Top Center) and these points can of course be determined directly from the degree markings adjacent to the top center marking of the corresponding cylinder.

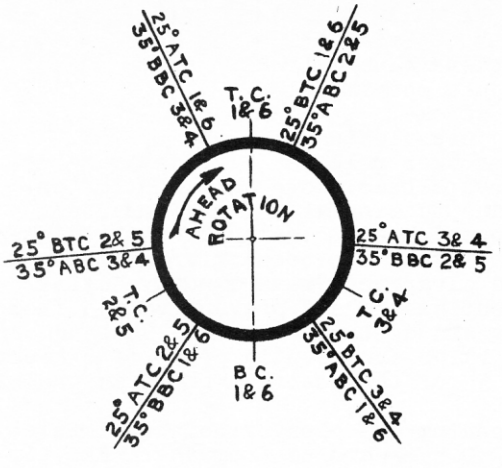

FIG. L-1

The intake valves normally close 35° A.B.C. and the exhaust valves open 35° B.B.C. Referring to Fig. L-1, these points may be obtained on the flywheel as follows. Since the crankshaft has three throws 120° apart the top centers of the three pairs of cylinders will be 120° apart. Bottom center of any pair of cylinders is 180° from top center. Therefore the bottom center of any pair of cylinders is 60° from the top centers of the other two pairs. As previously stated, each top center is marked for 25° in either direction. Subtracting this 25° from the above 60° leaves 35°. Hence each 25° A.T.C. point is also the 35° B.B.C. point for the preceding pair of cylinders and similarly each 25° B.T.C. point is also the 35° A.B.C. point for the following pair of cylinders.

13. POINTER LOCATION

The location of the flywheel pointer should be checked occasionally by "splitting

the center". With one of the cylinder heads removed crank the engine to a point about 20° off top center. Measure the exact distance from the top of the liner down to the piston and observe the pointer reading on the flywheel. Then set the piston to the same distance below the top of the liner on the other side of top center and observe the flywheel pointer reading. If the readings do not agree adjust the pointer to give equal readings on each side. These readings should preferably be taken with an indicator and in each case the piston should be cranked upward into position.

14. CAMSHAFT TIMING

In order to time the engine it is necessary to determine the correct relation between the crankshaft and camshaft, which is done by positioning the camshaft gear on its hub, and then to adjust the push rods to open and close the valves at the correct points. Unless the crankshaft gear, camshaft gear or camshaft gear hub have been replaced, the camshaft can be correctly timed after overhauling as follows. Before breaking the gear train spot No. 1 piston exactly on firing top center. With a steel scale bearing firmly against the machined side of the centerframe scribe a line across the side of the camshaft gear parallel to the centerframe face. When re-assembling mesh the gears with the crankshaft and camshaft in the same relative positions, that is, with No. 1 piston on firing top center and the line on the camshaft gear in line with the centerframe face.

If the crankshaft gear, camshaft gear or the camshaft gear hub is replaced, the camshaft may be timed as follows:

(a) Spot No. 1 piston on top dead center.
(b) Set the camshaft gear relative to its hub so that clamping bolts are approximately in the center of the slots. Orient camshaft gear so that old dowel holes will not interfere with redowelling.
(c) Turn the latch shaft to the AHEAD position (latches out).
(d) Turn the camshaft (with intermediate gear out of mesh) so that the inlet and exhaust lifters of No. 1 cylinder are each raised an equal distance. (NOTE: The piston was set at top dead center as this is the mean position between the 5° B.T.C., opening of the inlet valve, and the 5° A.T.C., closing of the exhaust valve, and at this position both valves should be open an equal distance.)
(e) Holding crankshaft and camshaft in above positions and allowing camshaft gear to slip on its hub as required, mesh the intermediate gear and tighten the clamp bolts between the camshaft gear and hub. After all valves have been timed and checked, drill 31/64" holes through gear in line with dowel holes in hub and ream to .497" - .498" for dowels.

After determining the correct relation between the camshaft and crankshaft the push rods must be adjusted as follows: (See Section O for timing of fuel spray valve.)

15. INLET & EXHAUST VALVE TIMING

(a) Spot piston at 5° B.T.C. at the end of the exhaust stroke.
(b) Adjust inlet push rod so that valve is just opening.
(c) Spot piston at 5° A.T.C. on the suction stroke.
(d) Adjust exhaust pushrod so that valve is just closing.
(e) Check clearance between valve stems and rocker rollers. The cams are designed for 1/32" clearance with the valves set as above and with the engine cold, but this will vary somewhat due to manufacturing tolerances. When making the adjustments aim at the opening and closing points but keep the clearances between .020" and .040", varying the opening and closing points slightly if necessary. Excessive clearances mean a noisy engine and increased wear on parts. Insufficient clearances prevent valves from seating properly, with consequent blowby and destruction of valves and seats.
(f) Check and record closing point of inlet valve and opening point of exhaust valve. These points should fall within 5° of the position given in the timing table.
(g) Shift latch shaft to ASTERN and check opening and closing points of inlet and exhaust valves when running ASTERN. Discrepancies from the AHEAD timing up to 5° may occur due to manufacturing tolerances, but no attempt should be made to correct this condition, as any changes in the pushrod adjustments will upset the AHEAD timing.
(h) Adjust and record valve timing for the other cylinders as above.

16. STARTING AIR VALVE TIMING

(a) Insert steel block 5/16" thick between the air starting rocker and the top of the piston in the pneumatic tappet in the starting air valve.

(b) Spot piston at 5° B.T.C. at the end of the compression stroke (in the AHEAD direction and with latch shaft AHEAD) and adjust the pushrod so that the valve is just opening. Check the closing point, which should fall within 5° of the position given in the table. (See Paragraph 10)
(c) Shift latch shaft to ASTERN and spot piston at 5° B.T.C. ASTERN.
(d) Adjust astern air starting cam relative to its hub so that starting air valve is just opening and clamp cam to hub. Check closing point.
(e) Adjust and record starting air valves for the other cylinders as above.

17. CAMSHAFT DRIVE GEARING

The camshaft is driven from a gear on the crankshaft by means of an intermediate gear. The split helical crankshaft gear is keyed and clamped to the crankshaft between two collars. It should fit snugly on the shaft diameter and the assembly of gear and clamps should also fit snugly between the shaft collars.

The intermediate gear has replaceable bronze bushings and rotates on a case hardened steel shaft. The intermediate gear bracket or bearing in which the gear and shaft are mounted is bolted and doweled to the manifold side of the centerframe. Shims between the bearing and the centerframe and movement of the bearing transversely permit backlash adjustment of the gears, which should be set at .006" to .008". If the bushings in the intermediate gear are replaced they should be reamed to 2.937" to 2.938" diameter and faced to 3.002" to 2.998" in thickness after being pressed into the gear. The clearance between the gear bushings and the shaft should then be .002" to .004" and the total lateral clearance .005" to .012". Lubricating oil under pressure is supplied to the intermediate gear bearing from the header in the base.

The camshaft gear is bolted and doweled to a hub which is keyed and clamped to the forward end of the camshaft. It should be located fore and aft in line with the intermediate gear.

FUEL SUPPLY SYSTEM

The complete fuel system may be conveniently divided into two parts, the fuel supply system and the fuel injection system. The fuel supply system is made up of the fuel transfer pump, the fuel day tank and the fuel filter, while the fuel injection system includes the high pressure fuel pump, the fuel rail, the accumulator, the fuel pressure regulating valve, the fuel spray valves, and the necessary connecting tubing.

1. IMPORTANCE OF CLEANLINESS IN FUEL HANDLING

The high pressure fuel pumps and fuel spray valves have been referred to as the heart of the Diesel engine and the proper functioning of these parts is necessary for the successful operation of the engine. These pumps depend upon lapped plungers working in cylinders with clearances measured in hundred thousandths of an inch and it is vital that the fuel entering these parts be kept free of any grit or foreign matter. The engine is equipped with filters for this purpose but it is also necessary for the operators to use every possible care in getting clean fuel oil and in keeping it clean until it is delivered to the engine. Fuel tanks and piping should be thoroughly cleaned when installed and should be kept covered at all times.

The fuel filter should be periodically cleaned and serviced according to the detail instructions given in paragraph #3. The best filters obtainable will be useless if dirt is introduced into the fuel after it has passed through them, and it is therefore of great importance that every effort be made to protect the fuel pipes after the filter during repairs and overhauls. Cleanliness is handling fuel, piping and injection equipment is of vital importance and will pay good dividends in trouble-free operation. Many times mysterious and expensive pump and fuel spray valve troubles have been traced to careless handling of fuel and carelessness in storing and installing spare parts.

2. FUEL TRANSFER PUMP

The fuel transfer pump, which is located in the pump housing on the forward end of the engine, delivers a continuous supply of fuel to the engine from the main storage tank. It is a rotary type gear pump, similar in construction (but smaller in size) with the lubricating oil pumps described in Section S. The description will not be repeated here, nor the instructions regarding direction of rotation, which apply equally well to the transfer pump. (On direct reversible marine engines the rotary gear type fuel transfer pump is reversible. Consequently fuel is delivered irrespective of direction of rotation.) The fuel transfer pump drive is shown on Fig. N-1. Transfer pump (19) is mounted in adapter (17) which is bolted and doweled to housing (1). If the adapter is replaced it must be positioned for .004" to .005" gear backlash before doweling. A cylindrical fit between pump and adapter permits replacement of the pump without disturbing the drive gear setting. The pump shaft and rotor is carried in three bronze bushings, one in the adapter and two in bearing (10) which is bolted to the adapter. If replaced these bushings must be line reamed to .6250" - .6255" dia. after pressing in and with the bearing bolted to the adapter.

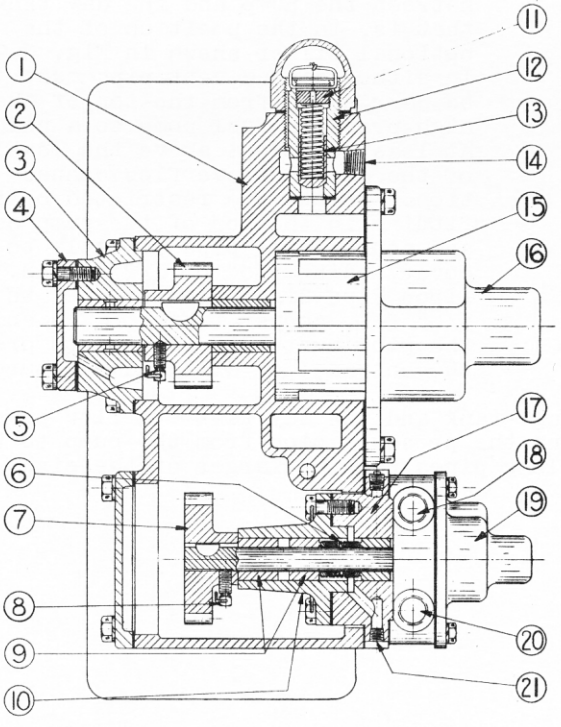

FIG. N-1

The bushing in the adapter is lubricated by fuel oil from the pump, and the two in the bearing by lubricating oil, fed through drilled holes in the castings from a lubricating oil line connecting into the adapter. Oil seal (6) which rotates with the pump shaft bears against faces on the adjacent bushings. If these bushings are replaced care must be taken that these faces are not damaged when pressing the bushings in place. Bushing faces must also be square to the pump shaft. Fuel leakage past the seal is drained off through connection (21), which should be piped back to the fuel supply tank. Under no circumstances should this opening be plugged, or

the fuel will drain into the lubricating oil in the crankcase. Drive gear (7) is secured to the shaft with a Woodruff key and setscrew, which should be securely wired, as should all the internal bolts in the assembly.

3. FUEL OIL FILTER

The fuel oil filter is a metal edge type filter, similar to the lubricating oil filter described in Section S and the detailed description will not be repeated here. There are two elements in series, with .002" and .003" spacing. The dirt may be scraped off the elements by turning the cleaning handles on the top, and this should preferably be done when the engine is not running so that the dirt can settle freely to the bottom of the sump tanks although there is no objection to cleaning with the engine running. The sumps should be drained before the dirt builds up to the level of the elements.

After draining refill the filter through the priming plug in the top, and leave the vent cocks slightly open when starting the engine to allow the trapped air to bleed out. The filter elements may be replaced by removing the handles and sump tanks and unscrewing the elements from the head. CAUTION: Element is attached to head with left hand thread. Assemble with .003" element on the inlet side.

4. FUEL DAY TANK

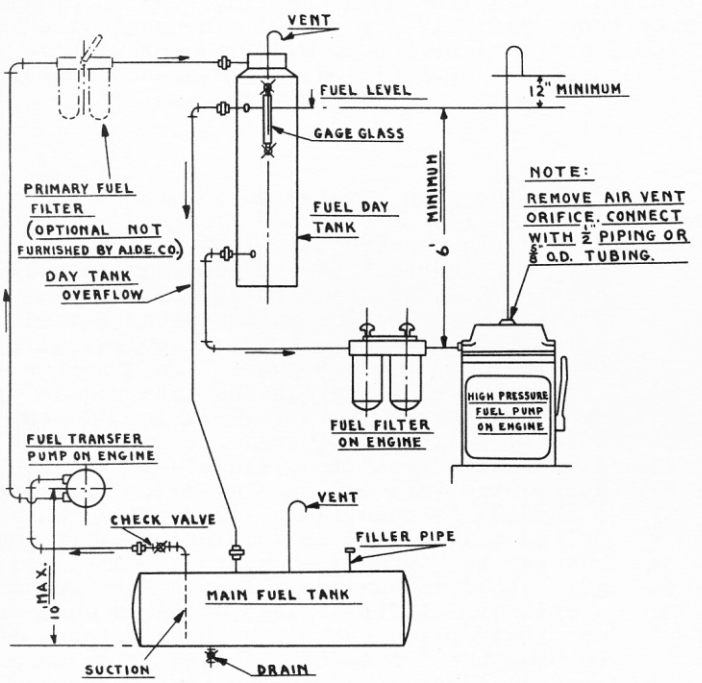

FIG. N-2

The fuel oil day tank should preferably be installed as shown in Fig. N-2. This hookup shows the fuel filter on the engine connected between the day tank and the high pressure fuel pump. This is quite desirable, as the filter then protects the engine against contamination of the fuel in the day tank. However, it requires a gravity head of at least six feet to force the fuel through the filter, and if the space limitations of the engine room will not permit locating the day tank to give this head, it will then be necessary to connect the filter between the pump and the day tank, that is, in the position of the optional filter shown in Fig. N-2. In either case a vent pipe must be carried up from the top of the high pressure fuel pump to a point at least one foot above the level of the day tank overflow connection. Remove the restricted orifice fitting in the top of the pump cover, and connect the pipe directly to the cover, using 3/8" or 1/2" I.P.S. (Iron Pipe Size) pipe or 1/2" to 5/8" O.D. copper tubing. The end of the pipe must be protected to prevent the entrance of dirt and moisture.

The suction pipe from the pump to the storage tank and the day tank overflow pipe should be 1/2" or preferably 3/4" I.P.S. and the pressure pipe from the pump to the engine should be 1/2" or 3/4" I.P.S. For long pipes use the larger of the sizes given.

FUEL INJECTION SYSTEM

1. HIGH PRESSURE FUEL PUMP

The high pressure fuel pump is located on top of the centerframe at the forward end on the operating side of the engine. The pump consists of three plungers actuated by crossheads and connecting rods from a crankshaft which is bolted to the forward end of the camshaft. A small hand operated plunger is also built into the pump and is used for priming the fuel system and for building up fuel pressure when the spray valves are being timed or tested.

Referring to Fig. O-1 cast iron guides (30), located in holes in the centerframe and secured by capscrews, carry crossheads (29), which are actuated by the crankshaft and connecting rods (16). The bronze connecting rods have a clearance of .0005" to .0025" on their crankpins and a side play of .005" to .009". Roller bearing in the upper end of the connecting rod shown on Fig. O-1 is not used on this engine model. The wrist pin bearing is formed directly in the bronze connecting rod instead. The clearance between the connecting rod and pin is .001" to .0015". Each crosshead has a replaceable bronze sleeve (28), held in place by a shoulder on the lower end of the crosshead and by the oil guard (27) and plug (26) at the upper end. The clearance between this sleeve and the crosshead guide is .002" to .004" and if it becomes excessive new sleeves should be installed. Lubrication is by spray from the cranks.

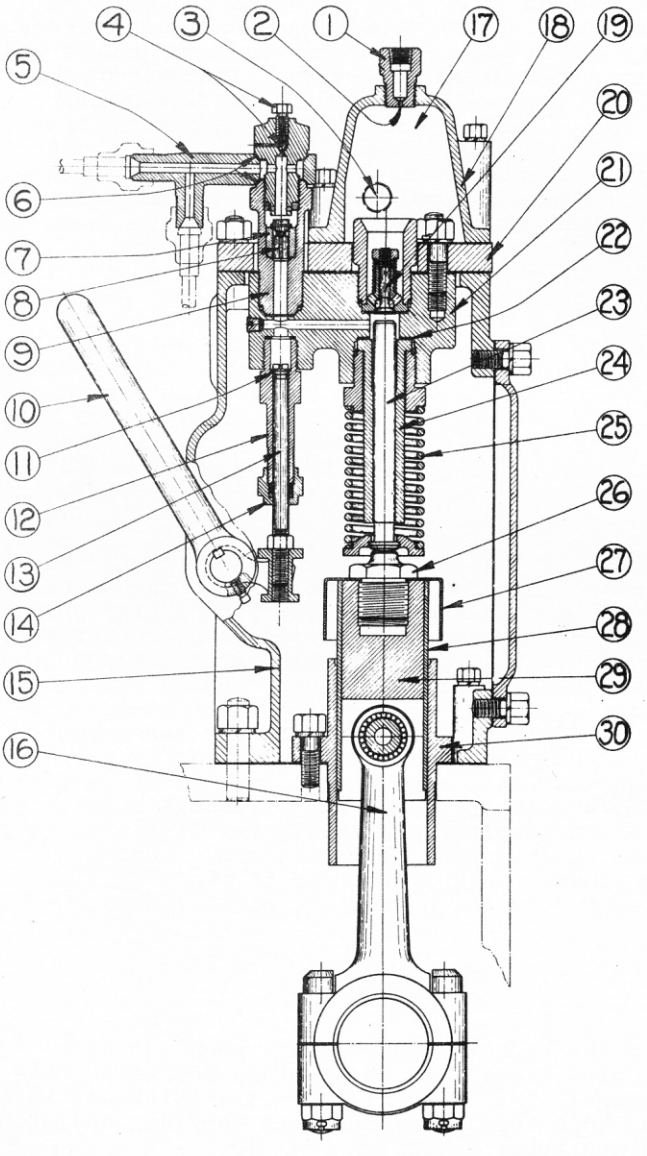

FIG. O-1

Pump housing (15) supports mounting plate (20) and carries handle (10) and shaft of the priming pump. Mounting plate (20) which is bolted to the top of the housing carries the individual pump bodies (21) on its lower face. The pump bodies contain all the essential parts of the pump, namely, barrel (24) and plunger (23) suction valves (19), discharge valves (8), and the priming pump plunger assembly (12) and (13).

The suction and discharge valve assemblies extend upward through holes in the mounting plate and a suction chamber (17) is formed by the mounting plate and its cover (18). A reservoir of fuel under low pressure is consequently located immediately above the suction valves.

Plunger and barrel assemblies (23) and (24) of the main pumps are installed in seats in the bottom of pump bodies (21). Retaining nuts hold the barrels in place and copper gaskets between the barrels and seats form the seals. Springs, retained at the lower ends of the plungers by special washers, force the plungers downward on the suction strokes. The plungers and barrels are lapped together in matched pairs and are not interchangeable. Always use care to prevent mixing them. If either piece becomes scored or damaged both must be replaced. Always wash parts thoroughly in clean solvent or fuel oil and lubricate with clean engine oil before replacing.

When dismantling the pump, mounting plate (20) together with the pump bodies and plunger barrel assemblies should be removed from the housing as a unit. Hold the plungers in place as the unit is lifted, as they will drop out when free of the crossheads.

Suction valves (19) are located in pockets in the top of the pump bodies immediately above the plungers. They are mounted in cages which form the guides and seats, and are held closed by

springs, which are retained by nuts on the valve stems. The cage assemblies are held in place by retaining plugs screwed into the pump bodies, and are sealed to the bodies by copper gaskets. The valve lift is determined by the clearance between the top of the cage and bottom of the spring retaining nut, and should be set at 1/16". The valves may be removed by unscrewing the retaining plugs, after first removing top cover (18).

Discharge valves (8) are mounted in cages (9) which are screwed into the tops of the pump bodies. Spherical seats make tight joints between cage & body without gaskets. Flutes on the valve stems work in hardened steel inserts (7) pressed into the cages. The valve lift is limited by retaining plugs which screw into the tops of the cages and secure discharge tees (5). The lift should be 3/32". Spherical surfaces between the tees and the cages and plugs form tight joints without gaskets. Bleeder valves (4) in the tops of the retaining plugs permit venting entrained air from the fuel. The above construction is identical for all pumps. Four of the tee outlets are connected together, and the other two lead to the accumulators, regulating valve and fuel rail.

Leakage of the suction or discharge valves can usually be stopped by lapping lightly with very fine grinding compound, but if this is not successful new valve and cage assemblies should be installed. If the lower end of the retaining plug above discharge valve (8) shows signs of heavy hammering this is usually due to discharge valve seat (7) being loose in the cage. The cage and seat must then be replaced. Hammering may also be due to insufficient discharge valve lift which should never be less than 1/16".

Priming pump assembly (12) and (13) is threaded into the bottom of the forward pump body directly below the discharge valve. The barrel is screwed into the pump body against a copper gasket and has a packing nut at its lower end. The upper end of the plunger (11) has a valve head which engages a seat in the barrel preventing leakage when the priming pump is not in use. If the pump leaks while the engine is running the valve should be lapped in. If the unit leaks while the fuel system is being primed the packing should be either tightened or replaced. Service work on this pump will be greatly facilitated if the mounting plate (20) is unbolted and the whole fuel pump assembly is removed from the housing.

Fuel leakage from the main pumps and the priming pump collects on top of the centerframe inside the pump housing, and is drained off through a hole in the end of the centerframe. The high pressure fuel pump has been designed to give long trouble-free performance provided that it is given reasonable care. Water, dirt and other impurities in the fuel will materially shorten the life of the plungers and barrels. The normal working pressure is 4000 to 5000 lbs. per square inch but the pump is capable of building up pressures far in excess of this figure. Carelessness in the care of the pressure regulating valve, may cause it to become ineffective, and the resulting high pressure may injure the pump and also damage other parts of the injection system.

2. FUEL RAIL

The fuel rail is located on the operating side of the engine level with the tops of the cylinder heads. One end of the rail is connected directly to the high pressure fuel pump and the other end is connected to the accumulator, pressure relief valve, pressure gauge and back to the high pressure fuel pump. A tee is provided in the pressure gauge line for the pilot house gauge connection.

Isolating valves are built into the fuel rail at the outlets to the spray valves and an additional valve is provided for the purpose of testing the spray valves.

The fuel rail consists of a length of 3/4" O.D. x 3/8" I.D. seamless steel tubing inserted in and brazed to the bodies of the isolating valves. The isolating valve stems, which have hardened conical ends, are threaded into the valve bodies. The valve seats are replaceable tobin bronze washers and are held in place by plugs which are screwed into the valve bodies and to which the injection lines from the spray valve are connected.

3. INJECTION TUBING

All of the high pressure lines used in the injection system are seamless steel tubing. The ends are formed by brazing union sleeves to the tubing, and union nuts fasten these ends to the various fittings. 3/8" O.D. x .109" wall thickness tubing is used. A high grade tubing is used, make especially for this service, and standard seamless steel tubing should never be substituted.

The importance of keeping the injection lines clean cannot be overemphasized. When an injection line is removed from the engine the open ends should be covered with

clean paper which should not be removed until the tubing is to be placed on the engine again. If there is any doubt as to the cleanliness of an injection line it should be thoroughly cleaned before installing. To clean a line it should be washed repeatedly in cleaning solvent or gasoline and should be blown out with an air hose between each washing. This cleaning process should be carried on until there is no uncertainty as to the cleanliness of the tubing.

4. ACCUMULATORS

To prevent large pressure fluctuations in the injection system each time a spray valve opens or a pump delivers fuel the volume of the high pressure system is increased by the addition of two accumulators. The fuel in the accumulators, due to its compressibility, tends to maintain a constant pressure in the fuel system without appreciable fluctuations. The accumulators are welded steel bottles mounted on top of the centerframe and are connected to the fuel rail and high pressure pump.

5. FUEL PRESSURE REGULATING VALVE

Injection pressure control is afforded by the adjustable pressure relief valve. This valve is of the by-pass type in which the opposing forces of a spring and the fuel pressure acting on the stem of a needle valve maintain constant fuel pressures. If the pressure starts to drop the spring closes the needle slightly reducing the amount of fuel by-passed with the result that the pressure is held constant.

Referring to Fig. O-2 the regulating valve is built around valve body (7). The hardened steel valve seat (8) is held between the body and adapter stud (9) which screws on the bottom of the body and through which passage (18) allows the by-passed fuel to escape. Fuel inlet elbow (16) is threaded into the side of the body, supplying fuel to the annular space around the reduced section of the valve stem (17). The top of the body is bored to receive stem packing (15) and packing gland (14). Screwed to the top of the body is relief valve spring cage (5). This cage is screwed down upon the drain cup holding the latter in place against a shoulder on the body.

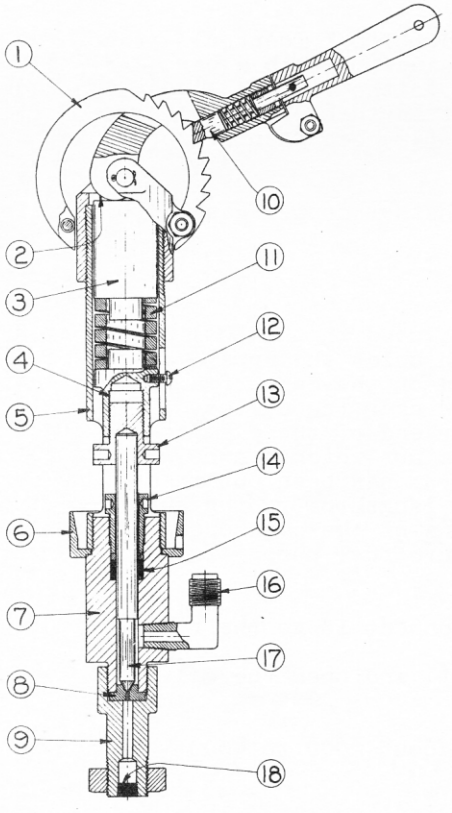

FIG. O-2

Cage (5) carries upper spring seat (3), Spring (11), and the lower spring seat. Valve spring adjusting screw (13) which is bored to receive the upper end of the valve is threaded into the bottom of the lower spring seat. A small machine screw in the lower spring seat engages a slot in the cage and prevents rotation of the seat when the adjusting screw is being turned. The bearing assembly which holds the control handle and sector (1) is threaded to the upper end of cage (5). The lower part of the control handle is shaped to form a cam which actuates the upper spring seat. A spring loaded pawl (10) in the handle engages teeth in sector (1) so that the handle will remain in position after it has been adjusted. A downward force on the end of the handle pulls the pawl away from the sector and allows the handle to be lowered.

The injection pressure is normally changed by moving the handle up or down. Moving the handle in an upward direction increases the pressure, downward movement lowers the pressure. The pressure increase or decrease per notch is approximately 600 to 800 lbs. However, the pressure in any notch may be changed by means of adjusting screw (13).

Packing (15) will need replacing when the fuel leakage around the valve stem (17) becomes excessive. Tighten the packing gland just enough to prevent leakage. Never attempt to stop leakage by tightening the gland severely when new packing is needed. A loss of fuel pressure can often be traced to dirt lodged between valve stem (17) and the seat (8). This condition can be remedied by removing adapter stud (9) and valve seat (8) from the bottom of the relief valve and thoroughly cleaning the valve and its seat. Occasionally it may be necessary to lap the needle and its seat to prevent excessive by-passing and a low fuel pressure. After performing this operation all traces of grinding compound should be carefully washed off before the valve is reassembled.

6. SPRAY VALVES

The purpose of the spray valve (or fuel injection valve) is to meter the fuel accurately, to deliver it precisely at a definite moment, in a definite time into the combustion chamber in the form of a finely atomized spray. It might be stated that the successful operation of the engine depends upon the proper functioning of the spray valves more than on any other item. If the engine does not perform properly and the exhaust is smoky, the functioning of the fuel valves should be checked first of all. In the great majority of cases servicing the fuel valves and making them function properly corrects the trouble.

Fundamentally, the spray valve is a heavily spring loaded needle valve. Referring to Fig. 0-3 the seat of the needle valve is incorporated in the tip or nozzle (1) just above the entrances to the spray orifices. The lower end of valve body (4) is counterbored to receive the end of the spray valve tip. A shoulder on the spray tip (1) which is centered in the counterbore, is held securely against the lower end of the body by nut (2). Valve assembly (3) is made up of two sections. The lower section has a conical end which is ground to the seat in the spray valve tip. This lower stem section is pressed into an extension (10) which in turn is screwed into an adjusting nut provided with a shoulder at the lower end. On top of the shoulder is mounted a ball type thrust bearing which is the lower retainer for spring (9). Upper spring retainer (12) screws into the upper end of valve spring casing (13) which in turn is threaded to the upper end of valve body (4).

The flange used for clamping the valve is drilled and tapped to receive fuel elbow (6) which supports the small metal edge type filter (15). Fuel is carried from this point to the nozzle in the annular space surrounding stem (3). Leakage upward along the stem is prevented by packing (7) held between an upper and lower gland and secured by packing nut (8).

7. REMOVAL OF SPRAY VALVE FROM ENGINE (See Fig. 0-3)

(a) Loosen clamp screw (39) and screw up on adjusting screw (40).

(b) Loosen hold-down screws for rocker shaft (43) and hold-down nut for clamp (11). Remove the clamp.

(c) Disconnect the injection line at the spray valve filter.

(d) Loosen the spray valve by rotating it back and forth. Then pull it upward. In some cases it may be necessary to pry the valve upward with a bar. As the spray valve is lifted see that rocker (42) does not jam in the valve and bend the valve stem. After the spray valve has been lifted about an inch or so rocker shaft (43) can be lifted out of rocker stand (44) and rocker (42) can then be moved back out of engagement with the spray valve.

(e) After the spray valve has been removed note whether copper gasket (5) remains in the cylinder head or on the end of the valve.

8. TEST EQUIPMENT

All the parts for a spray valve test stand are included in the tool equipment supplied with the engine. The spray test clamp which holds the spray valve directly below the flanged section of the body can be mounted on the centerframe or latch box of the engine or at some other convenient location near the engine. The long stud supplied with this equipment screws into the outer end of the clamp. The test handle is supported on the upper end of the stud by a nut which can be screwed up or down on the stud until the desired height of fulcrum has been obtained. Fuel is supplied from the extra fuel rail valve through a length of tubing supplied with the tool equipment. Fuel pressure is obtained by means of the hand operated priming pump located at the forward end of the high pressure fuel pump. To test a spray valve proceed as follows:

(a) Clamp the spray valve in the test stand and connect it to the fuel rail.

(b) Close all the isolating valves on the fuel rail and open the valve which supplies the test stand.

(c) With the priming pump build up a pressure of about 2000 to 4000 lbs. per square inch.

(d) Open the valve quickly three or four times by hitting the end of the test handle sharp blows with the fist, watching as the valve operates to see if a fine fuel spray comes out of each hole in the tip.

(e) Wipe off the tip carefully, pump up the pressure to about 4000 lbs. per square

inch again and operate the spray valve as described in step 4 until the pressure has dropped to about 3000 lbs. per square inch. Then watch the bottom of the tip for a period of time to see if drops of fuel form, indicating tip leakage.

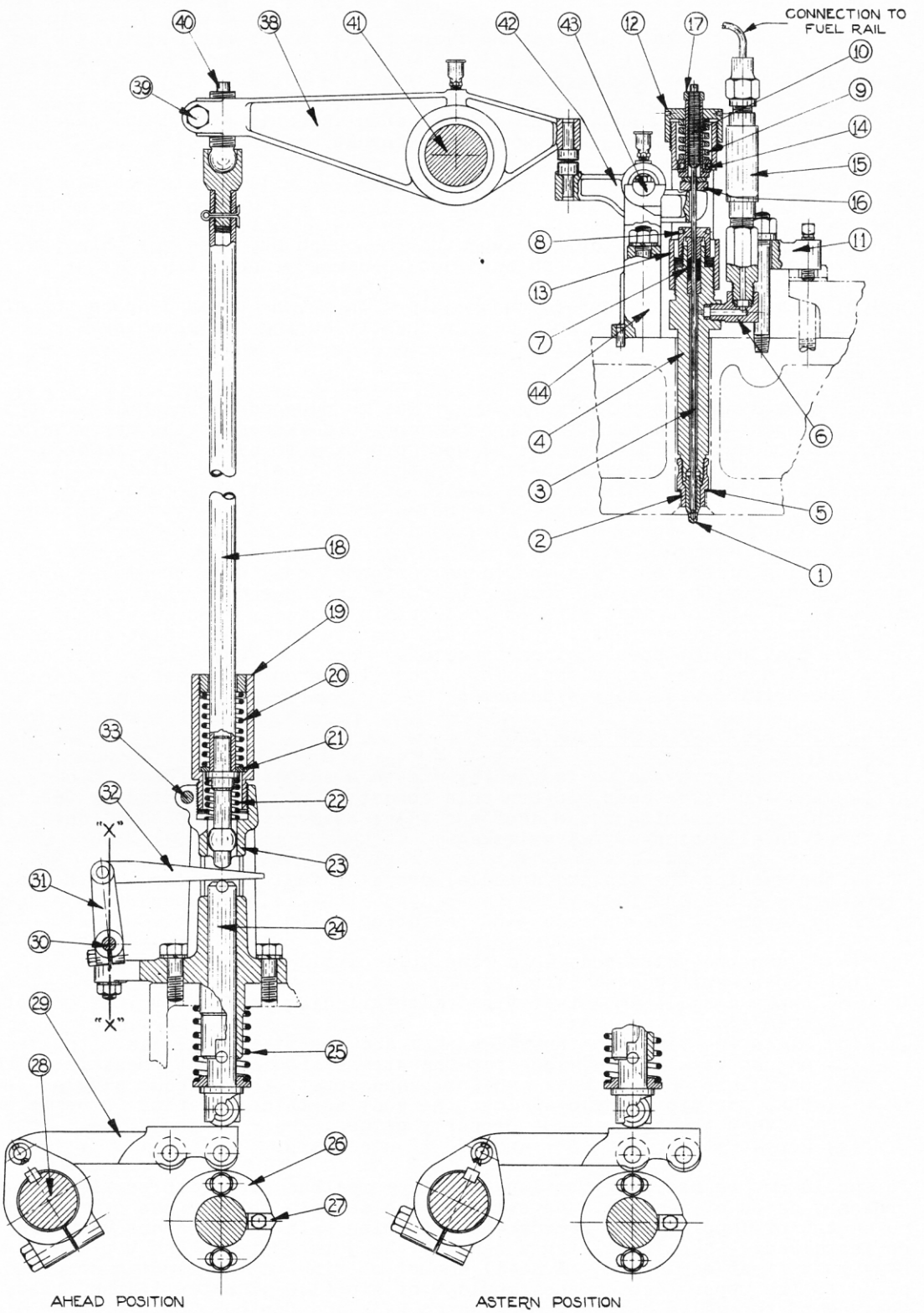

FIG. O-3

9. DISASSEMBLY OF SPRAY VALVE (See Fig. O-3)

If the sprays are not uniform, if one or more orifices are entirely plugged up, or if drops of fuel form on the end of the tip after testing as described in step (e) of the preceding section, the spray valve must be taken apart and serviced. Proceed as follows:

(a) Clamp the spray valve at the flanged section of the body in a vise.

(b) Unscrew upper spring retainer (12) with a suitable pin or drift.

(c) Loosen packing nut (8) and remove stem assembly (3 and 10) together with the retainer (12), spring (9) and thrust bearing (14).

(d) Unscrew valve seat nut (2). Spray tip (1) will usually come off with the nut.

(e) Drive the tip out of the nut with the punch supplied for this purpose in the tool equipment. Use care not to damage end of tip.

(f) Clean the outer surface of the tip with a wire brush dipping the tip into cleaning solvent or fuel oil frequently during the brushing.

10. CLEANING THE SPRAY ORIFICES

If the sprays are not uniform or an orifice is plugged up the holes in the spray tip must be cleaned. Again, if it is necessary to disassemble the spray valve for some other reason such as leakage, it is good practice to clean the orifices at the same time. It sometimes happens that all of the orifices become slightly clogged with the result that they deliver less fuel. Such a condition cannot be detected when the spray valve is tested but if the holes are cleaned every time service work is performed upon the spray valves this condition will be taken care of.

The cleaning of the orifices should be performed only with the music wire and pin vise supplied with the tool equipment, not with the ends of hat pins and other such devices. If the original wire is lost obtain a piece of music wire of not more than .013" dia. for this purpose. (14½" bore engines have .014" dia. orifice holes. The orifice dia. on 15" bore engines is .016".) Work the wire in and out of each orifice until the holes are clean. This operation should be performed carefully so that the orifice will not be deformed.

11. CORRECTING SPRAY VALVE TIP LEAKAGE

Leakage of the spray valve is usually due to a small amount of dirt between the needle and the valve seat. Often this condition can be remedied by washing the tip thoroughly and cleaning the end of the valve stem. This procedure should be attempted first in all cases of valve leakage.

If, after washing the tip and spindle, drops of fuel still form on the bottom of the tip shortly after the fuel valve is sprayed, it will be necessary to reseat the valve by lapping. The procedure of reseating a tip is as follows:

(a) Clamp the valve body in a vise horizontally.
(b) Loosen spring retainer (12).
(c) Apply a small amount of fine valve grinding compound to the end of valve stem (3).
(d) Place the tip over the valve stem and insert it <u>fully</u> into the valve body.
(e) Adjust retainer (12) so that the stem exerts a <u>light</u> pressure on the tip.
(f) Oscillate the tip back and forth and rotate the spindle slowly. Be sure that the tip is held against the body as this operation is being performed so that the tip will be properly guided.
(g) Repeat steps "c", "d", and "f" if necessary.

It should not be necessary to lap the tip more than two or three times to correct ordinary cases of leakage. However, if the seat in the tip has been badly damaged no amount of lapping will remedy the situation. In such instances a new tip should be installed. When installing a new tip the joint between the tip and the valve body must first be lapped. A small amount of fine valve grinding compound is applied to the upper face on the shoulder of tip (1). The tip is then installed in the end of the valve body and oscillated back and forth. The tip is held gently against the body as this operation is being performed. One light lapping process should be sufficient to produce a perfect seal between the tip and valve body. The tip is then lapped to the valve stem by the method described in this paragraph.

12. VALVE PACKING ADJUSTMENT

Packing nut (8) should never be appreciably more than finger-tight. A small amount of fuel leakage past the packing is necessary for proper lubrication of the spindle. Too tightly adjusted packing will prevent this lubrication and will result in a scored spindle and sluggish valve action. If a spray valve leaks excessively along the spindle after the packing has been lightly tightened up the need for new packing or a new spindle or both is indicated.

13. ASSEMBLY OF THE SPRAY VALVE - SPRAY VALVE "LIFT"

Referring to Fig. O-3, spring (9) must be adjusted to a certain tension in order to assure proper functioning of the spray valve. It is further important that the adjustment of all the spray valve springs be the same or that the "lift" on all the spray valves be the same. With "lift" as used in the following instructions is understood the lift which spring (9) will allow before its coils touch each other and prevent further upward movement of the valve stem. (The actual lift when the spray valves are operating in the engine is of course determined by the position of fuel wedge (32), the adjustment on pushrod (18) and cam (27). This actual lift is less than the "lift" as defined in this paragraph.) Proceed as follows to assemble the valve and adjust for proper "Lift" (or opening tension):

(a) Wet spindle (3) with clean fuel oil and slip it into position in the valve body.
(b) Clean the spray valve tip and install it carefully on the valve body. Tighten valve seat nut (2) securely.
(c) Screw down on spring retainer (12) carefully until the coils of spring (9) just touch. Be careful not to screw down so hard that valve stem (3) bends, rendering it useless. It is best to have the valve in the test stand when performing this operation and determine when spring (9) becomes solid by means of the test handle. When it is not possible to lift the spray valve stem by means of the test handle the spring coils are touching. The "Lift" is then zero.
(d) Unscrew spring retainer (12) one turn which will make the "lift" about 5/64". The "lift" on all the valves should be between 1/16" and 3/32".
(e) Screw down on packing nut (8) until it is just finger-tight.
(f) Test the functioning of the valve as described in paragraph 8.

14. ASSEMBLY OF SPRAY VALVE IN ENGINE

The spray valve is installed in the engine in the reverse order of its removal. Again referring to Fig. O-3, if copper gasket (5) is in the cylinder head merely lower the valve into position. If the copper gasket (5) was removed with the valve, the gasket can be held in position on the lower end of the valve by a coating of grease applied to the gasket.

After installing the valve it will be necessary to reset the push rod as described in paragraph 18. After timing, in order to clear the cylinder of excess oil, always turn the engine over on air with the snifter valves open and with the fuel isolating valves closed.

15. SPRAY VALVE FUEL FILTERS

In addition to the fuel filter at the high pressure fuel pump an individual filter (15) is supplied at each spray valve. The spray valve filters are of the metal edge type and have a spacing of .0015". They are installed in housing (15) which screw into the fuel inlet elbows at the spray valves. The frequency at which these filters will need cleaning will depend upon the quality of the fuel and the condition of the filter located at the high pressure fuel pump. After disassembling the housings it will be possible to unscrew the filter unit. Wash each unit thoroughly in clean solvent or fuel and blow it clean with compressed air, being careful not to injure the windings when handling it.

16. SPRAY VALVE OPERATING MECHANISM (See Fig. O-3)

The spray valve is actuated by cam (27), lifter or cam follower (24), pushrod (18), and rocker arm (36). In stationary engines the lifter follows the fuel cam directly. In direct reversible marine engines latch (29) is interposed between the lifter and the cam. Lifter (24) and latch (29) are held against the cam by spring (25).

Motion of the lifter is transmitted to the pushrod through wedge (32). As can readily be seen in Fig. O-3, moving the wedge inward will decrease the gap between the lifter and the pushrod. Consequently the spray valve will open sooner, will lift higher, and will close later. Moving the wedge outward produces the opposite results. The outer end of the wedge is pinned to lever (31) which is clamped to the

wedge shaft, which in turn is connected to the governor. Accordingly the governor, by rotating the wedge shaft, completely controls the action of the spray valves.

When the engine was tested at the factory, wedge levers (31) were adjusted to be parallel to each other and in line on wedge shaft (30) and were then clamped and pinned to the shaft. If new levers or a new wedge shaft are installed it is important that they be lined up in accordance with the above. The position of the fulcrum of wedges (32) for the full load full speed position (wedges fully in) should be about 3/8" inside the vertical line X-X through the center of the wedge shaft. The position of the wedge fulcrum for idling at low speed should be as shown in Fig. 11, that is, about 3/8" outside line X-X. In other words, line X-X should approximately divide the total movement of the wedge fulcrum in two equal parts.

Rockers (38) and (42) should be approximately horizontal and should be approximately parallel for all the spray valves. This is accomplished by means of the adjusting nut screwed on spindle extension (10). This nut bears down on spherical washers (16) which in turn bear on rocker (42). With rocker (38) disconnected hold rocker (42) against washer (16) without opening the spray valve. Adjust so that the top of the button on rocker (42) is about 7 7/32" above the top face of the cylinder head.

Buffer spring assembly (19), positions the pushrod relative to the lifter and assists spray valve spring (9) in returning the valve mechanism (rockers, pushrod, etc.) as the spray valve is being closed. The weak spring (22) below buffer spring (20) merely holds the pushrod against washer (21). As buffer spring assembly (19) is screwed down buffer spring (20) and washer (21) force the pushrod downward against the weaker spring and bring the end of the pushrod closer to the wedge and lifter. Proper adjustment of the buffer spring assembly is as follows:

(a) Bar the engine until the fuel cam follower is on the base circle of the cam.

(b) Set the wedge shaft and wedges in <u>full load position</u> (wedges "fully in" as determined by the governor weights being fully in) and unscrew cage (19) until there is clearance between the lower end of the pushrod and the upper face of the wedge.

(c) Slowly screw down cage (19) and at the same time move the wedge back and forth sideways with fingers.

(d) As soon as the wedge is felt to tighten unscrew the cage one-half turn and lock it in this position with the clamping screw.

NOTE: When timing the spray valves as described in the following the buffer spring assembly should always be unscrewed about one or two turns. When timing is completed adjust the buffer spring in accordance with instructions in this paragraph.

17. <u>SPRAY VALVE TIMING</u> (See Fig. O-3)

The timing procedure described in the following is for a spray valve opening of 11° B.T.C. (Before Top Center) and a spray valve closing of 15° A.T.C. (After Top Center). <u>The proper spray valve timing to use is stamped on the engine name plate and should always be followed.</u> (The standard valve timing is 11° - 15°. However, these timings are sometimes modified to suit special conditions of service.) If the timing on the name plate differs from 11° - 15° opening and closing the following instructions should be modified accordingly. Proceed as follows:

(a) Turn the latch shaft to the AHEAD position and unscrew all buffer Spring Cages one or two turns. Shut off all the isolating valves in the fuel rail except for Number 1 cylinder.

(b) Be sure that wedges are in the full load position ("fully in") as determined by the governor weights being against their inner stops. (Normally the wedges will be "fully in" when the engine is shut down but it is well to check this point.)

(c) Spot Number 1 cylinder at 2° A.T.C. on the power stroke. (Half way point between 11° B.T.C. opening point and 15° A.T.C. closing point.) Then unbolt and turn the fuel cam until the center of the toe is directly in line with the axis of the lifter. Clamp the fuel cam temporarily.

(d) Set the crankshaft 11° B.T.C. on the compression stroke. Bar the engine up to this point in the ahead direction of rotation.

(e) Pump up a fuel pressure of about 1500 lbs. per sq. inch with the hand pump.

(f) Slowly screw down on adjusting screw (40) (with clamp screw (39) loose), until

the pointer on the pressure gauge drops indicating that the spray valve has opened. Tighten screw (39) and check the adjustment by backing the engine up a few degrees, pumping the fuel pressure up again and barring the engine slowly in the ahead direction until the pressure again drops. If the flywheel pointer is not at 11° B.T.C. readjust and check again.

(g) Bar the engine over to 25° A.T.C. and again pump up the fuel pressure. Then bar the engine backwards slowly until the pressure drops. This point, which is the closing of the spray valve, should be 15° A.T.C.

(h) If this point is past 15° A.T.C. too long a spray period is at hand. It will be necessary to advance the fuel cam slightly and repeat steps "d", "e", "f", and "g". If on the other hand the spray valve closes before 15° A.T.C., retard the cam slightly and repeat steps "d", "e", "f", and "g".

(i) Repeat steps "c" to "g" on the remaining cylinders. Check and record the spray valve timings for ASTERN. The timing going Astern may be slightly different than the ahead timing. However, the ahead timing is the more important and no changes should be made to favor the astern timing.

(j) Adjust the buffer springs as per instructions in paragraph 16. Note that buffer spring cages should always be unscrewed when spray valves are timed.

18. BALANCING THE ENGINE FOR EQUAL LOAD ON ALL CYLINDERS

Theoretically, if the spray valves have been timed exactly and correctly (as outlined in the preceding paragraph) the amount of fuel injected in each cylinder should be the same. Consequently, the total engine load should also be equally divided between all the cylinders. Practically however, it is impossible to time all the spray valves exactly alike, and even if that could be accomplished manufacturing tolerances on such items as orifices in the spray valve tips, fuel cams, wedges, etc. are apt to affect the cylinder balance. The division of load between the various cylinders should consequently be checked after the engine is running, preferably at full load. Since the exhaust temperatures are proportional to the loads that the various cylinders are carrying the amount of fuel injected should be adjusted so that the exhaust temperatures for the various cylinders are alike, or nearly alike.

The amount of fuel injected and consequently the load carrying capacity of a cylinder may be changed by adjusting screw (40). Referring to Fig. 0-3, clamp screw (39) should be loosened and the adjusting screw turned to affect the adjustment. It should be noted, however, that this adjustment will affect the spray valve timing. Therefore, the adjustment should not be appreciable and should not exceed 3/4 turn of the adjusting screw from the position obtained when timing the spray valve.

The proper procedure for balancing the engine can be summarized as follows:

(a) Assuming that all the spray valves have been correctly timed it should be possible to balance the engine by turning adjusting screws 3/4 turn or less. Screwing down the adjusting screw will increase the exhaust temperature of the cylinder and vice versa.

(b) If an adjustment of 3/4 turn is not sufficient the timing of all the spray valves should be checked and, if necessary, adjusted as described in Paragraph 16.

(c) If the valve timing is found to be satisfactory or if, after making any necessary correction in the spray valve timing, a correction of 3/4 turn of the adjusting screw is still insufficient, defective combustion is indicated. This may be due to one or more spray tip orifices being plugged or to any of the defects dealt with under the heading "Smoky Exhaust" in the "Maintenance and Inspection" section.

CONTROL SYSTEM

The Control System includes all of the parts necessary for reversing the engine and operating it in the desired direction of rotation, starting and stopping the engine, and controlling its speed of rotation. According to the specific functions of the component parts, it may be subdivided as follows:

The Control Mechanism consisting of the Control Lever which is mechanically connected to the Disc Control Valve and to the Governor and Fuel Cut-Out mechanisms. The functioning of all the various parts of the Control System is governed by the Control Lever either by means of mechanical connections or by means of pneumatic connections to the Disc Control Valve.

The Reversing Mechanism consisting of the Latch Shaft and Latch Mechanism operated by the Air Ram and Reversing Rack which are mechanically connected to the Latch Shaft. The Reversing Rack is locked in the proper position by the Interlocking Mechanism. The position and movement of the Air Ram is controlled by the Disc Control Valve.

The Fuel Cut-Out Mechanism which operates to stop the engine by taking the wedge shaft out of control of the governor, rotating it to pull out the fuel wedges thereby cutting off the fuel to the engine.

The Governor which maintains the desired speed of rotation and the mechanical connections to the Control Lever by means of which this speed may be changed.

The Starting Mechanism which consists of the individual starting air valves in each cylinder head (described in detail in Section H) and the Master Starting Air Valve in the starting air manifold. The Master Valve is also controlled by the Disc Control Valve.

The Flywheel Air Brake which assists in stopping the engine between reversals and is therefore closely related to the reversing mechanism. It is also controlled by the Disc Control Valve.

The Cylinder Compression Relief Valves which serve the purpose of relieving the cylinder compression in the event that the engine becomes air locked. Since their operation is desired at the same period in the maneuvering cycle as that of the flywheel brake, they are connected to the line between the Flywheel Brake and the Disc Control Valve.

1. CONTROL LEVER AND VALVE

The engine is started, stopped and reversed, and the speed controlled by means of a single control lever located at the aft end of the engine. The only other control lever provided is on the fuel pressure regulating valve which governs the fuel injection pressure. This lever is also located at the aft end of the engine for convenience in operation, so that both levers can be reached from the aft end control station.

Referring to Fig. R-1 control lever (1) and disc type control valve (10) are mounted on a common shaft (12) which in turn is bearinged in housing (3) and valve body (8). (In Fig. R-1 the control lever is shown in a horizontal position and the section through housing (3) is also taken in the horizontal plane.) Housing (3) is fastened and doweled to plate (2) to which the control sectors, and front plate are also clamped. Plate (2), in turn, is clamped to the camshaft gear housing and is doweled to it at the factory after the entire assembly has been located correctly.

The control lever operates the reversing mechanism, starting air mechanism and the flywheel brake by means of disc valve (10). This is accomplished by means of ports in valve body (8) and ports and passages in valve (10). Thus valve body (10) is provided with two tubing connections to the air ram, one to the flywheel brake and one to the master starting air valve. Passages for effecting air relief are also provided. These are drilled holes through the valve body. The space (9) between disc valve (10) and the cover is connected to the air supply. The ports and passages in the valve and body are so arranged that either air under pressure is supplied to the various parts operated by the valve or the air pressure is relieved - depending on the position of the control lever.

As soon as the air shut-off valve located at the aft end of the starting air header, is turned on, air under reduced pressure is admitted to the space between the cover and valve (10). The pressure on top of the valve is regulated by means of a reducing valve also located at the aft end of the starting air header. This reducing valve is set at 160 lbs. per sq. inch when the engine leaves the factory, and this will

consequently be the maximum pressure on the disc valve even if the pressure in the starting air tanks should be higher. Naturally, if the pressure in the starting air tanks should fall below 160 lbs. per sq. inch the pressure on valve (10) will also fall below 160 lbs.

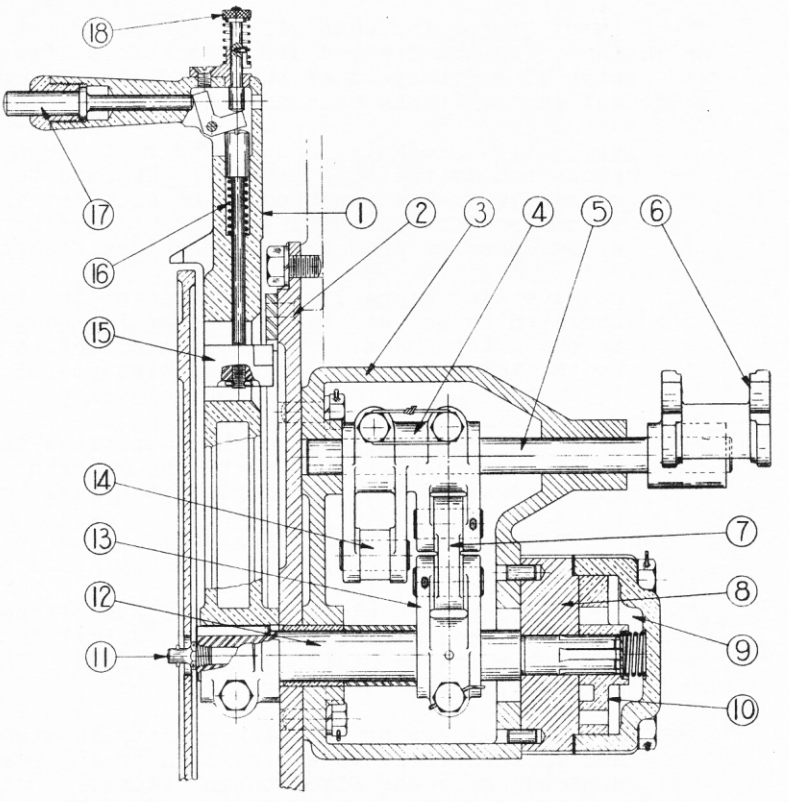

FIG. R-1

Lever (13) is clamped and pinned to control lever shaft (12) and is connected by means of link (7) and lever (4) to shaft (5). Fork (6) on this shaft operates the air ram locking and interlocking device described in paragraph 4. Link (14) which is connected to the other arm of lever (4) connects to the governor and by means of this link tension of the governor spring, and consequently the engine speed, is varied from the control lever. (See paragraphs 5 and 7.) Link (14) also connects to the fuel cut-out mechanism. The link and levers which connect shafts (12) and (5) are arranged in such a manner that the motion of shaft (5) is approximately the same when the control lever lever is moved from the vertical STOP position to the AHEAD start position and when the lever is moved from the stop position to the ASTERN start position. Consequently fork (6) which operates the air ram interlock and lever (4) which controls the governor spring tension move in approximately the same manner irrespective of whether the control lever is on the AHEAD or ASTERN side of the control quadrant.

The construction of control lever (1) and its operating mechanism is clearly shown in Fig. R-1. Depressing handle button (17) releases latch (15) from engagement with the quadrant clamped to plate (2). Upon release of the handle button spring (16) raises latch (15) and locks the control lever to plate (2). By depressing the handle button and at the same time depressing and turning knob (18) the control lever may be permanently disengaged from plate (2).

The contact surfaces of disc valve (10) and valve body (8) are ground and lapped plane surfaces. To preserve these surfaces which slide against each other when the control lever is being moved, some lubrication is required. A grease connection (11) is provided on shaft (12) and a drilled hole in the shaft connect to the above mentioned surfaces. Apply grease once a day by means of the gun furnished with the tool equipment and use <u>clean</u> grease. If dirt or grit gets in between the sliding surfaces of the disc valve and its body scoring and attendant leakage is almost sure to take place rendering the valve useless.

2. <u>LATCHES AND LATCH SHAFT</u>

For a given direction of rotation all the valves must be actuated in a definite sequence and with a definite timing. For direct reversible engines it is consequently necessary to provide dual sets of cams, one set for operation in the AHEAD direction of rotation, the other set for operation when running ASTERN. At the same time means must be provided for throwing one set of cams into operation, while at the same time the other set must be made inoperative.

In Atlas engines AHEAD and ASTERN cams are mounted side by side on the camshaft. Referring to Fig. R-2 it will be noted that latches equipped with two rollers are interposed between the cams and the valve lifter rollers. The two latch rollers are offset and lined up relative to the cams in such a manner that in the AHEAD position of the latches one set of rollers contact the AHEAD cams while at the same time the other set of rollers are free of the ASTERN cams. (Astern cam not shown

in Fig. R-2). Thus in the position shown in Fig. R-2 the AHEAD cams actuate the latches which in turn actuate the valves by means of the lifters, pushrods and rockers.

By rotating the latch shaft 60° the latch fulcrum points are moved inward (toward the center of the engine) to a point where the ASTERN cams contact the other set of latch rollers. This inward movement frees the AHEAD latch rollers of the AHEAD cams and consequently the ASTERN cams now control the actuation of the valves.

The fuel valve timing is very nearly the same for both directions of rotation. For example, in one direction of rotation the fuel valve may open 10° before top center and close 20° after top center. Then if the rotation was reversed and the latch kept in the same position the fuel valve would open 20° before top center and close 10° after top center. In other words, the timing would be 10° early. It is possible to compensate for this slight difference in timing by properly positioning the ASTERN roller on the fuel valve latch. Consequently only one fuel cam is provided which serves for both AHEAD and ASTERN running and the fuel latch rollers are in line, not offset as on the other latches.

Referring to Fig. R-2 the latch rollers turn on shouldered steel pins which are bolted between the two latch shanks. In the inlet, exhaust and starting air latches, spacers between the shanks of the latches and the sides of the rollers establish the positions of the rollers in line with the cams. The fuel valve latch does not require any spacers since only one cam is used and both rollers are in line. The rollers all have a clearance of .001" to .002" on the pins and a side clearance of 1/64".

The latches are fulcrumed on levers (20) which are keyed to the latch shaft which in turn is mounted on cast iron bearings bolted to the side of the centerframe. (Bearings not shown on Fig. R-2.) At the aft end the latch shaft is connected to the air ram reversing rack by means of levers (21) and (31), link (22) and pinion (32). In the AHEAD position shown in Fig. R-2 link (22) and lever (31) are in line. (For illustrative purposes shown slightly out of line on the Fig. R-2.) Consequently forces and reactions resulting from the operation of the cams and latches cannot be transmitted to the reversing rack. In the ASTERN position lever (31) has turned 180° and is consequently again in line with link (22).

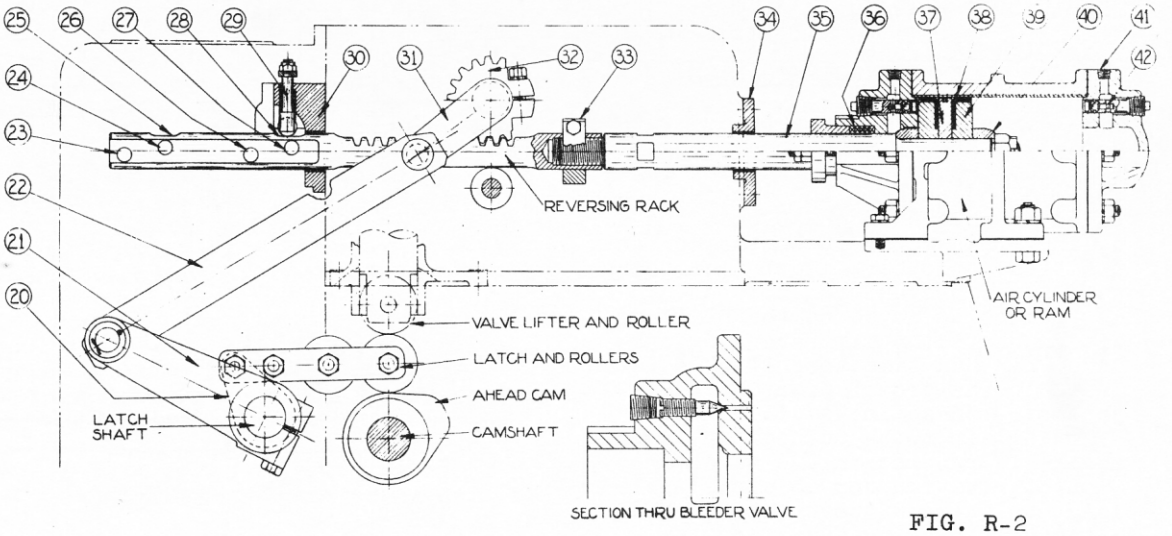

FIG. R-2

3. AIR RAM AND REVERSING RACK

The latch shaft is rotated from the AHEAD to the ASTERN position, or vice versa, by a double acting air cylinder or ram which is connected to the latch shaft by means of the reversing rack, and pinion (32) and levers (31) and (21) and link (22). (See Fig. R-2.) The air ram in turn is operated by the disc control valve described in paragraph 1. The ports and passages in this valve and its body are so arranged that when the control lever is moved from one direction of rotation toward the starting position in the other direction of rotation, air under the reduced pressure of 160 lbs. per sq. inch is admitted to one side of the piston in the air cylinder while the other side is connected to the atmosphere.

Referring to Fig. R-2 the piston assembly is made up of disc (37) provided with one bronze piston ring, cup leathers (38) and followers (39). On each side of the

piston assembly are mounted collars (40). These enter bores in the air cylinder heads and trap a portion of the air between the piston and the cylinder head toward which the piston is moving. The entrapped air can only escape through the bleeder valves provided in each head and thus an air cushion is provided at each end of the stroke. The cushioning effect can be regulated by adjusting the bleeder valves with a screw driver. To reach them it is first necessary to remove the pipe plugs. The bleeder valve screws should be approximately 1/4 turn open to provide the proper amount of cushioning.

Ports (41) are connected to the disc control valve body and through these ports air under pressure is supplied to one side of the piston while at the same time the air pressure is relieved on the other side. The purpose of check valves (42) is to admit air under pressure to the entire piston area and at the same time prevent the air which is trapped at the end of the stroke from escaping.

Air cylinder piston rod (35) is screwed into the end of the reversing rack which is split at the threaded end. It is locked by split collar (33). The reversing rack and piston rod are supported by guides (30) and (34). It is important that the air cylinder be lined up with the guides. Alignment in the vertical plane is accomplished by means of shims under the cylinder and if it is removed care should be taken that the same shims are used when re-assembling.

The adjustment of the air cylinder piston rod relative to the reversing rack should be as follows: Bar the reversing rack over until the piston is up against the cylinder head as shown in Fig. R-2. After removing the top cover on the reversing rack housing and loosening the screw in split collar (33) a wrench can be applied to the milled flats on piston rod (35) and it can be turned relative to the reversing rack. Keeping the piston against the cylinder head the piston rod should then be screwed in or out of the reversing rack until the center of holes (26) and (27) coincide with interlocking pins (52) and (53) (See Fig. R-3) mounted in interlocking pin and guide bracket (30). With the air cylinder piston at the other extreme of its stroke holes (23) and (24) should line up with the interlocking pins. If this is not the case the stroke of the air cylinder piston must be changed slightly and this may be accomplished by adding or taking out gaskets between the air cylinder and the heads. The total stroke of the air piston should be 7 1/16".

4. REVERSING RACK AND AIR RAM INTERLOCKING MECHANISM

The reversing rack is provided with a series of holes at the operating side in which two interlocking pins engage to hold the rack in the correct position for ASTERN or AHEAD once the air cylinder has moved it to the correct position. Another function of these pins is to prevent the control handle from being moved to the START position until the air reversing cylinder has had time to shift the latch shaft to the proper position. Furthermore, these locks will allow the starting air to be turned off if the engine is running in the same direction of rotation for an appreciable length of time without fear of the latch shaft moving away from its proper position for AHEAD or ASTERN running as the case may be.

Fork (6) in Fig. R-1 engages crosshead guides (51) (See Fig. R-3). Only one crosshead guide is shown. The other guide is under crosshead (47) on the other side of pin (52). Further referring to Fig. R-3 crosshead (47) is fastened to interlocking pin (52) which consequently is positively operated by the control lever (Lever 1 in Fig. R-1). Interlocking pin (52) moves to the left if the control handle is moved

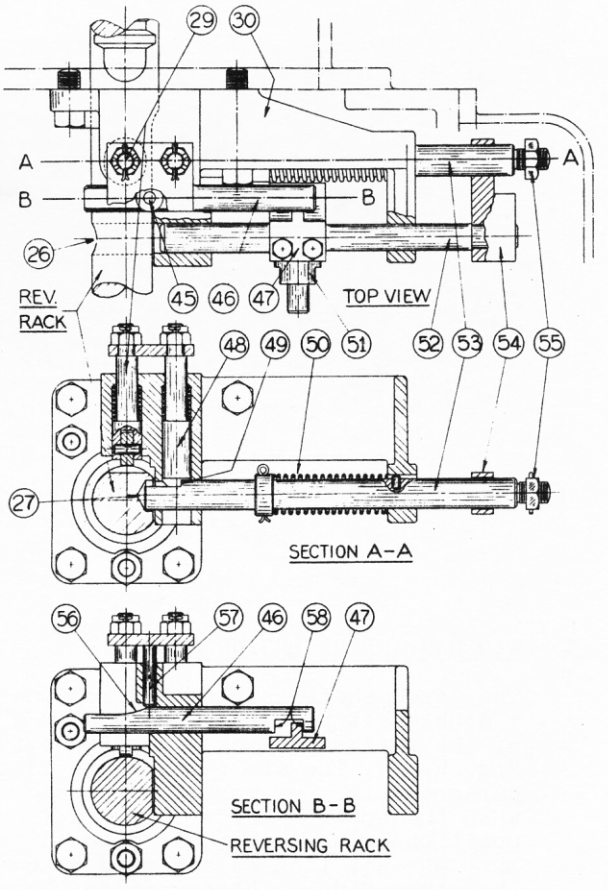

FIG. R-3

toward the starting position in either the AHEAD or ASTERN direction. Movement to the left is stopped by the reversing rack however if this is not in either the AHEAD or ASTERN positions. In the AHEAD positions hole (26) is in front of the interlocking pin and in the ASTERN position hole (23) (See Fig. R-2) is in line with the pin permitting it to enter these holes and lock the reversing rack. If however the reversing rack should be at some point between the AHEAD and ASTERN positions pin (52) and consequently the control lever will be stopped from further movement until the air cylinder has shifted the reversing rack, and consequently the latches, to the AHEAD or ASTERN position as the case may be. The point at which the control lever will be stopped if the shifting has not taken place is located approximately half way between SLOW and FAST on the control quadrant.

Since interlocking pin (52) enters holes (26) or (23) at a point approximately half way between SLOW and FAST it follows that if for some reason the control lever should be moved above that point the pin will be withdrawn from the holes and reversing ram and latch shaft would not be locked unless some other means for locking were provided. To provide these additional locking means is the function of the second interlocking pin (53) and its operating mechanism.

Referring to Section A-A in Fig. R-3, pin (53) is spring loaded and if not restrained by lever (54) and nut (55) or by pin (48) it will snap into either of holes (24) or (27) whenever either of these holes are in front of the pin, that is whenever the reversing mechanism is either in the AHEAD or in the ASTERN positions. It cannot snap into the holes in the reversing racks for any intermediate position and cannot enter holes (23) or (26) since these are offset.

Assume now that the control lever is in the STOP position and the engine either stopped or stopping. Interlocking pin (52) is then at its extreme position to the right (See Fig. R-3). Lever (54) has contacted nut (55) and has withdrawn the spring loaded pin (53) so that reversing rack is free to move and the air cylinder can shift the reversing mechanism as required. Once the spring loaded pin has been withdrawn it is tripped in the disengaged position by pin (48) engaging shoulder (49) on the pin. This trip is released either by movement of the air cylinder and reversing rack or by movement of the control lever to a point slightly below the point at which lever would be stopped by pin (52) if the latches were not in the correct running position.

Referring to Fig. R-2 the reversing rack is provided with depressions (25) and (28) one for the AHEAD and the other for the ASTERN position. As soon as the air ram starts to move the reversing rack from the position it had when the spring loaded pin was tripped in the disengaged position roller follower (29) (See Figures R-2 and R-3) will be raised releasing the trip. The spring loaded pin can then lock the reversing rack as soon as it has arrived in its correct position for AHEAD or ASTERN as the case may be.

If however the engine was started in the same direction of rotation in which it was previously running the reversing rack would not move and in that case the trip is released by movement of the control lever. When this lever moves toward FAST crosshead (47) moves to the left and engages slot (58) in pin (46). Pin (57) will then be raised by slope (56) and this motion is transmitted to pin (48) raising it and releasing the spring loaded lever. Consequently as soon as the air cylinder has moved the reversing rack, latch shaft and latches to their proper position of AHEAD OR ASTERN running as the case may be the reversing rack will be locked providing the control lever is moved to a position a little more than half way between SLOW and FAST. It will then stay locked no matter where the control lever is moved within the running range but will be withdrawn when the SLOW position is passed and the lever is moved further toward STOP.

All adjustments for the locking mechanism shown in Fig. R-3 have been properly set at the factory and should not require any attention. If the reversing mechanism does not function properly the fault is most likely to be found in the air cylinder. In that case the air cylinder piston and cup leathers (38) (See Fig. R-2) should be investigated first of all.

5. CONNECTION TO GOVERNOR AND FUEL CUT-OUT MECHANISM

The connections between control lever shaft (12) and the governor and fuel cut-out mechanism are shown in Fig. R-4. (Refer also to Fig. R-1. Parts have same reference numbers in both figures.)

As described in paragraph 1 shaft (5), lever (4) and link (14) have practically identical motion when the control lever is moved in the AHEAD and when it is moved in the ASTERN quadrants. This consequently also applies to all levers and links in governor and fuel cut-out mechanisms since these are all actuated by link (14).

Shafts (63) and (67) are mounted in the governor housing and lever (66) which determines the governor spring tension is pivoted on the latter shaft. It is connected to link (14) by means of levers (62) and (64) on shaft (63) and link (65). Fuel cut-out shaft (70) is bearinged in the governor housing (lower bearing not shown in Section A-A) and is connected by means of levers (68) and (61) and link (60) to shaft (63) and hence to the control lever. Ball joints are used at both ends of link (60). Fuel cut-out lever (72) is clamped and pinned to the fuel control shaft at its upper end. This lever is consequently driven by the control lever and its position depends on the position of the control lever.

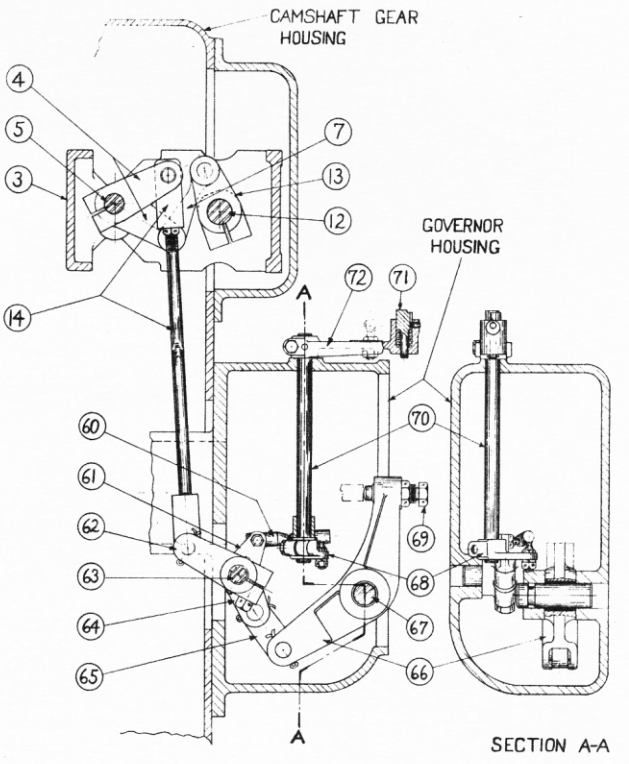

FIG. R-4

6. FUEL CUT-OUT AND CONTROL MECHANISMS

Referring to Fig. R-5, fuel cut-out shaft (70) and lever (72) are again shown in this figure. The top view in Fig. R-5 is looking down on the top of the governor housing. Governor control lever (76) by means of which the governor determines the position of the fuel wedge shaft and hence the engine speed is also shown.

Fuel cut-out lever (72) is hooked up to the fuel wedge shaft by means of a link consisting of sleeve (74) and rod (75) which is free to slide in the sleeve. The end of rod (75) is connected to lever (81) which in turn is clamped to the fuel wedge shaft. Rod (75) is provided with nut and locknut (79) at its inner threaded end and these engage sleeve (74) when engine is being stopped. For all running positions, however, there is clearance between the sleeve and the nuts.

Governor control lever (76) is connected to the wedge shaft by means of a collapsible link (77). Spring (78) in this link tends to maintain a certain length between the two ball joints at the ends. On the other hand, if the wedge shaft is forcibly moved, either manually or by the shut-down linkage, the spring will collapse and will permit the wedge shaft to be moved to the "No Fuel" position without affecting the governor. It should also be noted that the governor is free to move the wedge shaft without any restraint from the shut-down linkage if the control lever is in any running position. In that case rod (75) slides freely in sleeve (74) when the wedge shaft is turned.

When the control lever is moved toward the STOP position the distance between nuts (79) and end of sleeve (74) decreases, and at the SLOW position this sleeve just contacts the nut. Further lever movement toward STOP turns the wedge shaft to a point where no fuel is injected and the engine stops. When the wedge shaft is turned by the control handle the spring (78) in link (77) is compressed so that the governor is

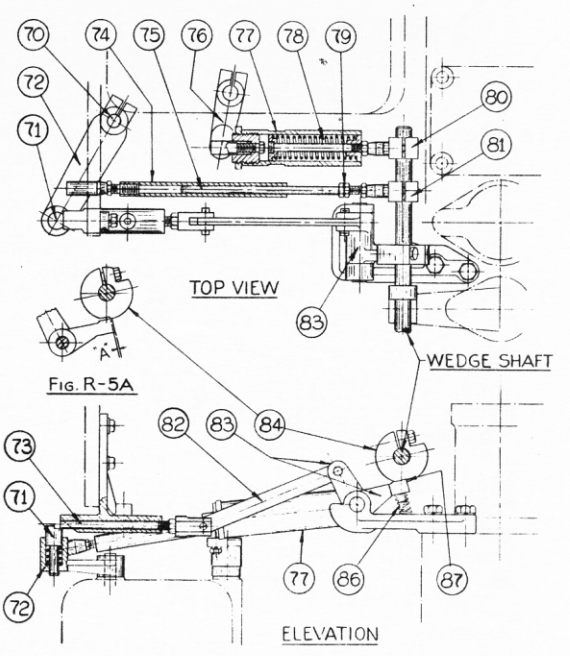

FIG. R-5

not affected.

During the period when the control lever is in the START position the fuel is cut out which is accomplished in the following manner. Referring to Fig. R-5 when the control lever is moved past SLOW to STOP the wedge shaft is rotated by the cut-out levers and links until it is tripped by lever (83) acting on collar (84) in the "No Fuel" position. When the control handle is moved to START the fuel wedge shaft is held in the "No Fuel" position by lever (83) and spring (86). At the START position of the control handle the linkage has the position shown in Fig. R-5.

When going from START to FAST lever (72) moves inwardly until the step on spring actuated plunger (71) comes up against pin (73). Further movement pushes this pin inwardly which motion is transmitted to lever (83) by link (82) releasing the fuel wedge shaft which will then be controlled by the governor. The release of the fuel wedge shaft should take place about half way between the START and FAST positions. If the control lever is moved further toward SLOW pin (71) is moved against its spring by the slanted edge on the guide for pin (73) until it is free to slide under it. Thus moving the control lever beyond FAST does not affect the wedge shaft tripping mechanism.

Referring to Fig. R-5A, when the wedge shaft is controlled by the governor, lever (83) is free to slide on the cylindrical part of collar (84). The position of collar (84) on the wedge shaft should be such that when the engine is idling at the lowest speed there is a sufficient margin against the wedge shaft being tripped in the "No Fuel" position. Dimension "A" should be at least 1/32" to 1/16" when engine is idling at low speed.

7. GOVERNOR

The construction of the governor is shown in Fig. R-6. Pinion (7) which is mounted on spindle (4) meshes with the camshaft gear. The backlash should be about .006". Governor weights (2) tend to move out when the spindle is being rotated and consequently rollers (1) on the governor weight arms exert a force on rod (3). This force is transmitted to governor spring (10) through quill rod (3) and thrust bearing (8). The reaction against the governor housing is taken by thrust bearing (5).

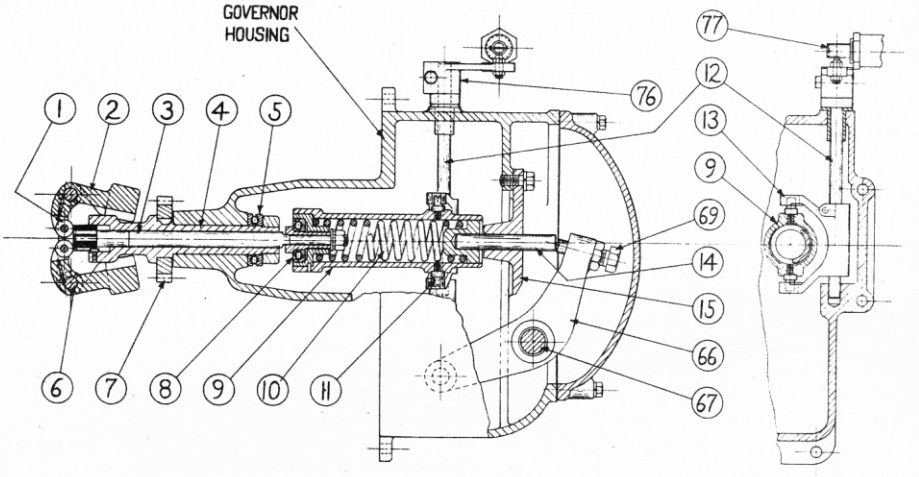

FIG. R-6

Spring cage (9) is guided at one end by the sleeve enclosing thrust bearing (8). This sleeve is pinned to the spring cage. At the other end the spring cage is supported and guided by a retainer mounted on pin (14). The retainer has a sliding fit in the spring cage, which consequently is free to follow the motion of quill rod (3) and the governor weights. Spring cage (9) is prevented from following the rotation of quill rod (3) by pins (11) which are engaged by forked lever (13). The motion of the spring cage and hence the governor weights is also transmitted by this lever to governor control shaft (12), governor control lever (76) and link (77). (See paragraph 6.)

As explained in paragraph 5, the control lever is connected to lever (66) (See Figures R-4 and R-6). When the control lever is moved toward FAST the top of lever (66) moves inwardly and this motion is transmitted to pin (14) by screw (69). Thus the tension of the governor spring is increased and hence the engine speed is increased. Moving the control lever toward SLOW lowers the tension of the governor spring and the engine slows down.

Lever (66) is provided with adjusting screw (69) thus if it is desired to slightly increase the speed when the control lever, for example, is in the FAST position, the adjusting screw on the lever is screwed in. This is the only governor adjustment which should be made in the field. The adjustments on the links connecting the governor to the wedge shaft have been correctly set at the factory and should

not be disturbed.

8. MASTER STARTING AIR VALVE

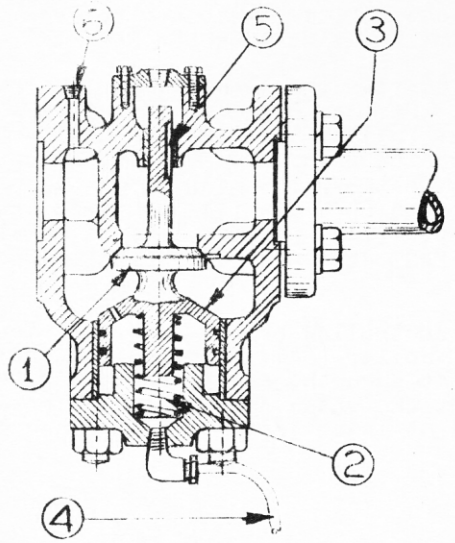

FIG. R-7

The master starting valve, mounted on the after end of the starting air manifold, is shown in Fig. R-7. Air from the receivers is admitted to the lower side of the valve (1) and the pressure against the valve head, together with spring (2) keeps the valve closed. Pressure on both sides of piston (3) is normally balanced by air bleeding through a small hole in the top of the piston. The lower side of the piston is connected by means of tube (4) to the disc control valve described in paragraph 1. When the port in this valve opens and the pressure below the piston is relieved, the force on top of the piston, the area of which is greater than that of the valve head, overbalances the upward forces and the valve opens, admitting starting air to the manifold. When the port in the control valve closes the pressure below the piston quickly builds up again and closes the valve. Slot (5) in the valve stem vents the manifold when the valve is closed, and is in turn closed by the lowering of the stem when the valve opens. Connection (6) is for the air pressure gauge. The cast steel valve housing is fitted with bronze bushings for the piston and valve stem, and if replaced they should be bored and reamed 3.4995" - 3.5005" and .561" - .562" respectively after pressing in the housing. The reamed holes must be kept in line with the valve seat, which should be ground when necessary to keep the valve tight.

9. FLYWHEEL BRAKE

The flywheel brake assembly is shown on Fig. R-8. Brake shoe (1) is faced with brake lining which is riveted to the shoe. It is supported by pins (6) which slide in elongated holes in bracket (7) which in turn is fastened to the centerframe. The brake shoe also forms the cylinder around piston (3) which is held stationary by the end shoulder being clamped between bracket (7) and the centerframe. When air is admitted to the cylinder in the brake shoe it will tend to move out against the flywheel since the piston is held stationary. When the air pressure is relieved spring (2) will pull the brake shoe away from the flywheel. Cup leather (4) forms the air seal between the piston and cylinder. There are no adjustments necessary on the brake and the only service requirements are the replacement of the shoe lining and the piston cup leather when necessary.

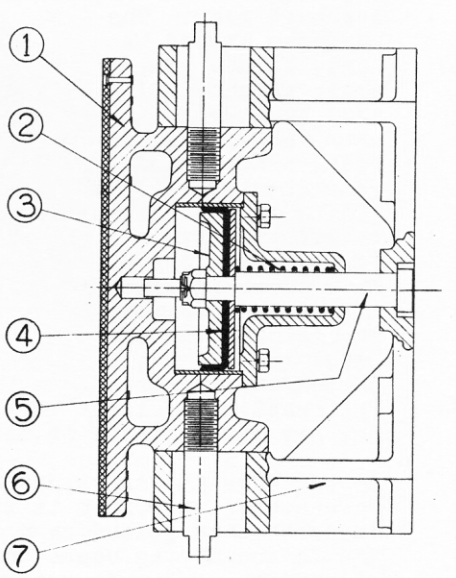

FIG. R-8

10. COMPRESSION RELIEF VALVES

The pneumatically operated cylinder compression relief valves, illustrated in Fig. R-9 serve to relieve the pressure in the cylinders in the event that the engine becomes air bound on top center. These valves receive air from a manifold mounted just below the starting air manifold. As previously explained, the air is supplied from the line to the flywheel brake. Since it is only at infrequent intervals that the operation of these valves may be required a globe valve is placed in the line feeding the manifold, and it is recommended that it normally be kept closed. If at any time the engine refuses to start due to the cylinders being air bound, the valve should be opened while the engine control lever is at STOP, and the cylinder pressures will immediately be relieved.

Referring to Fig. R-9, valve body (3) is screwed into tee (1), which is in turn screwed into the cylinder head.

Valve (2) is held against its seat in the body by spring (5), which is secured to the top of the valve stem by a nut and washer.

Piston (4) bears against the end of the valve stem, and when air from the manifold

is admitted to the hole (7) in cap (6) the force on the piston overbalances the spring force and the force due to the cylinder gases on the head of the valve and the valve is opened, relieving the cylinder pressure through the drilled holes in the valve body.

The relief valves should not need any adjustment, other than to grind the seats in occasionally if they leak.

11. MANEUVERING THE ENGINE - SUMMARY OF CONTROL EVENTS

Assume that the engine has been running ASTERN and that it is desired to go AHEAD. The Control Lever has then been located somewhere between FAST and SLOW on the ASTERN side and the first step is to move it to the STOP position as shown in Fig. R-10. On its way up to STOP the Control Lever has then caused the fuel to be turned off and the Flywheel Air Brake to go on. Consequently with the Lever in STOP as shown the engine will rapidly come to a stop. The lever should be kept in the STOP position until the engine has come to a full stop.

After the engine has stopped the control lever can be moved toward START on the AHEAD side. Referring to the numbered positions on Fig. R-10 the following events take place.

(1) In this position the ports in the Disc Control Valve leading to the Air Ram start to open and the Ram starts to move the latches to the AHEAD position.

(2) In this position the Control Valve relieves the air pressure in the Flywheel Brake and it goes off. The cylinder compression relief valves also close at this point.

(3) Keep the control lever in this position for a moment until the air ram has shifted the latches to AHEAD. Watch the pointer on the Reversing Ram handwheel hub. When it is up the latches are in the AHEAD position.

(4) If the Control Lever has been moved too fast and the Air Ram has not had time to complete the shifting from ASTERN to AHEAD the Lever will be stopped from further downward movement at this point. (See Paragraph 4) If this should happen move the lever back slightly to allow free movement of the reversing rack.

(5) If engine had previously been running AHEAD instead of ASTERN as assumed the tripping mechanism for the spring loaded interlocking pin would release it at this point and it would lock the Reversing Rack in place. (See paragraph 4.)

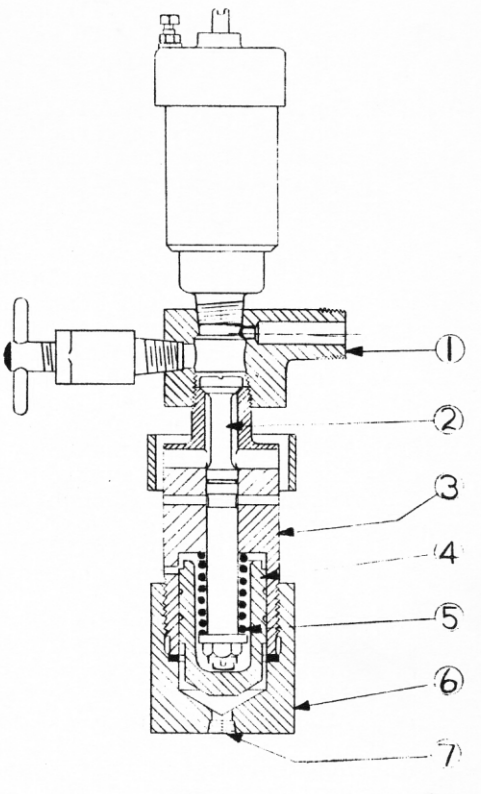

FIG. R-9

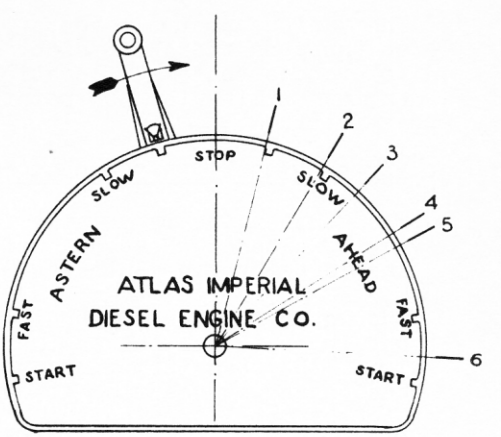

FIG. R-10

(6) At this point the ports in the Control Valve connecting with the Master Starting Air Valve will begin to open and further movement of the control lever downward will cause the engine to turn over on starting air in the AHEAD direction of rotation.

Finally the Control Lever arrives in the START position and the engine is turning over on air. The fuel wedge shaft is held in the "No Fuel" position. As soon as the engine has attained sufficient speed the lever should be moved to FAST or to some position between FAST and SLOW. Moving the Control Lever from START toward STOP the following events occur. Referring to the numbered positions in Fig. R-11

(7) The fuel wedge shaft is released by the tripping mechanism described in paragraph (6). Fuel will now be injected and the engine will start to fire. Master Starting Air Valve closes at approximately this point.

(8) Engine is now running under governor control. The governor spring is compressed a maximum amount by the control lever and engine is running at its rated speed.

(9) As the control handle moved up toward SLOW the tension on the governor spring is decreased and consequently the engine slows down. At this point the fuel cut-out mechanism (See Paragraph 6) starts to turn the fuel wedge shaft toward the "No Fuel" position.

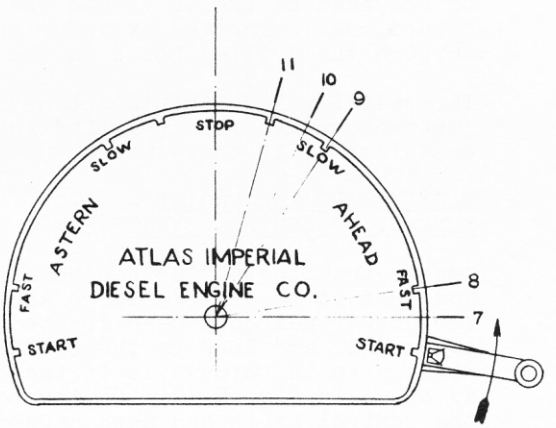

FIG. R-11

(10) The wedge shaft has now been turned to the "No Fuel" position when it is tripped by the mechanism described in paragraph (16). The fuel wedge shaft will now stay in the "No Fuel" position until the control handle has been moved down to START and up again to position (7). At this point the air brake also starts to go on and the engine slows down.

(11) The ports in the Disc Control Valve connecting to the Air Brake are now fully open and the engine is rapidly coming to a stop. If the globe valve to the Compression Relief Valve Header is open the cylinder compression will also be relieved when the Lever is in STOP. Keep the Control Lever in STOP until the engine has come to a full stop.

It should be noted that there are two positions on each side of STOP. (The position of the Lever shown in Fig. R-10 and position (11) in Fig. R-11.) The engine will stop in either of these positions. However, the point at which the Control Valve ports to the Air Ram start to open are located close to the STOP positions. Consequently the Air Ram might start to move the reversing mechanism to the ASTERN position if the lever is placed in the ASTERN side STOP position (as shown in Fig. R-11). Therefore if it is probable that the engine will again be started in the same direction in which it was running, the lever should be moved only to the first STOP.

The various control events on the ASTERN side take place at points corresponding to those on the AHEAD side. It should also be noted that due to manufacturing tolerances the exact location of the various points will vary somewhat on different engines. Likewise the points on the AHEAD and ASTERN sides may not be exactly symmetrical.

12. MANEUVERING AFTER PROLONGED RUNNING OR SHUT-DOWN

When the engine is running for a long period of time the starting air shut-off valve may be closed. However, before any maneuvering is done the air shut-off valve should be opened so that air is available for the reversing mechanism if needed.

Should the engine be running it can of course be stopped without turning on the air but in that case the engine will coast for a considerable period of time, particularly if the boat is moving and there is no air available for the flywheel brake. If the engine is coasting it can, of course, be started in the direction of its rotation by merely moving the handle to some point between SLOW and FAST, but in that case the following precautions should be observed: There being no air in the reversing cylinder to hold it in place, the latches are held in the AHEAD or ASTERN position entirely by the interlocking pins described in paragraph 4. The positively operated interlocking pin locks the reversing rack and the latches at point "4"! (See Fig. R-10.)

The spring loaded pin was pulled out by the control lever when it was put in the STOP position and is released by either movement of the reversing mechanism or by the control handle. In this case, the reversing mechanism has not moved and therefore the spring loaded pin must be released by moving the handle down to the position "4" shown on Fig. R-10. The releasing of the spring loaded interlocking pin is accompanied by a loud "click" which can easily be heard. It is not necessary to hold the handle in position for any length of time. Should it be desired to run slow, the handle can immediately be moved back up to SLOW and the latches are then locked in position for the entire speed range.

If the engine has been running or shut down for a considerable period of time and a period of maneuvering is anticipated, it is advisable to give the automatic air starting valves in the cylinder head a few drops of penetrating oil to make sure that they are not stuck. Squirt a little penetrating oil between the spring coils so that it will follow the stem down and lubricate the piston below.

After the engine has been started and the control lever has been moved to FAST or to a point between FAST and SLOW, the air pressure in the starting air manifold should automatically be relieved. Springs at the lower ends of the air start push rods will then raise these rods and the valve lifters so that the lifter rollers will not contact the air start cams. The air start push rods are then stationary and not moved by the cams. If, after the control handle has been put in the FAST position, the air start push rods still keep on moving, this is generally a sign of a stuck air start valve in a cylinder head, admitting exhaust gases to the starting air header. The particular valve which is stuck open can generally be determined by feeling which of the starting air header intake pipes is hot. This valve should then be freed up with penetrating oil as outlined in the preceding paragraph.

LUBRICATING OIL SYSTEM

1. The lubricating oil system consists of the day tank, two lubricating oil pumps (pressure and sump pumps), the lubricating oil filter, the lubricating oil cooler and the necessary piping and manifolds to carry the oil through the system and to the bearings. In addition to the main lubricating oil system as outlined above there is also the Madison-Kipp lubricator, supplying a measured quantity of oil to each piston and cylinder liner. The normal oil flow is from the day tank to the pressure pump, then through the oil cooler to the manifold in the base supplying the main bearings. Drilled holes in the crankshaft carry oil to the crankpin bearings and the rifle drilled connecting rods feed the piston pins. The oil from the bearings drains down to a sump in the after end of the base, from which it is sucked up by the sump pump and discharged back to the day tank.

   A line supplying the by-pass filter is taken from the lubricating oil pressure pump and the discharge from this filter lubricates the rotary pump drives, the camshaft bearings and the governor.

   A four-way cock interconnecting the piping to and from the lubricating oil cooler permits by-passing and isolating the cooler. A pressure relief valve in the pump housing protects the pressure pump in the event that the cock is thrown to an intermediate position (and thus shut off) or against a stopping up of the oil cooler. The cock should always be thrown quickly from one position to the other, and should never be left in an intermediate position. The relief valve, provides means for regulating the pressure on the system. The discharge should be piped by the customer to the lubricating oil day tank, and the valve should be adjusted for 40 to 50 lbs. per square inch, as indicated on the pressure gauge, with the oil hot. Note that low lubricating oil pressure may not necessarily be due to relief valve adjustment, but may result from one or more of the following causes, and their possibilities should be investigated before attempting to correct by readjusting the valve.

   (a) Low lubricating oil level in day tank.
   (b) Restriction in suction pipe to either of the lubricating oil pumps.
   (c) Broken pressure pipe or fitting.
   (d) Crankshaft bearing failure.
   (e) Worn Pump gears.
   (f) Viscosity of oil too low, excessive temperature of oil, or thinning out with fuel oil.

2. LUBRICATING OIL DAY TANK

   The standard lubricating oil day tank, has a capacity of about 50 gallons. It should be mounted vertically with the bottom at least three feet above the engine room floor, and should be piped by the customer to the discharge from the lubricating oil sump pump and the suction of the pressure pump. The former connection should be $1\frac{1}{4}$ to $1\frac{1}{2}$" pipe, leading to the $1\frac{1}{4}$" pipe tap hole in the top of the tank, and the latter connection should be $1\frac{1}{2}$" to 2" pipe, and should lead to the 2" pipe tap hole 10" above the bottom of the tank. A drain valve should be connected to the bottom of the tank.

   Gage glasses indicate the oil level, which should be maintained between the center and top of the upper gage glass when the engine is running. Under no circumstances should it be permitted to drop below the top glass. The tank should be drained and flushed out at intervals to keep the sludge in the bottom from building up to the pump suction connection. New oil should be added to the system through the filler hole in the top of the tank, which is protected by a screen.

3. LUBRICATING OIL PRESSURE PUMP

   The lubricating oil pressure pump drive is shown in Fig. T-1. The pressure pump (16) and the fuel transfer pump (19) are mounted in a common housing on the forward end of the control side of the engine. The lubricating oil pump is of the internal gear reversible type employing an internal gear, an idler gear and a crescent shaped baffle. The direction of flow through the pump is the same regardless of direction of rotation. When the engine reverses the crescent shifts position, following the rotation of the idler, and this causes the direction of flow to be maintained.

   If dismantled the pump must be reassembled with the parts in the same positions, as reversing the assembly will reverse the suction and discharge ports. The correct assembly may be determined by remembering that the crescent always moves through the suction zone when reversing. There is a projection on one side of the cover which acts as a stop for the crescent, and the cover should be assembled with this projection on the suction port side of the pump. Follow these instructions in determining the flow direction of the pumps rather than the arrows stamped on the casings, as these arrows may not always be correct.

The total end play between the pump rotor (16) pump body (15) and the inner face of the bore in housing (1) should be very small, only about .002" to .003". However, some end play must be allowed so that when the engine is reversed the crescent can move in the new direction of rotation until it is up against the stop. If the pump has been taken apart, re-assemble it to housing (1) but leave end bearing (3) and its cover off. Then turn the shaft by hand in both directions of rotation. It can then be felt when the crescent hits the stops. This is important because if the crescent cannot move the oil flow will not be reversed when the engine reverses and consequently the lubricating oil pressure will drop.

If replaced, the bronze bushings in housing (1) and end bearing (3) must be reamed to 1.000" - 1.0005" after pressing in. Use care to keep reamed holes in line. The bushing adjacent to the pump is lubricated by leakage along the shaft from the pump and the bushing in the end bearing is supplied with oil from the force feed system. The pinion driving the pump is keyed to the shaft and locked with a setscrew and meshes with a gear on the forward end of the camshaft. The setscrew head is drilled for locking wire, and should be well wired when reassembling.

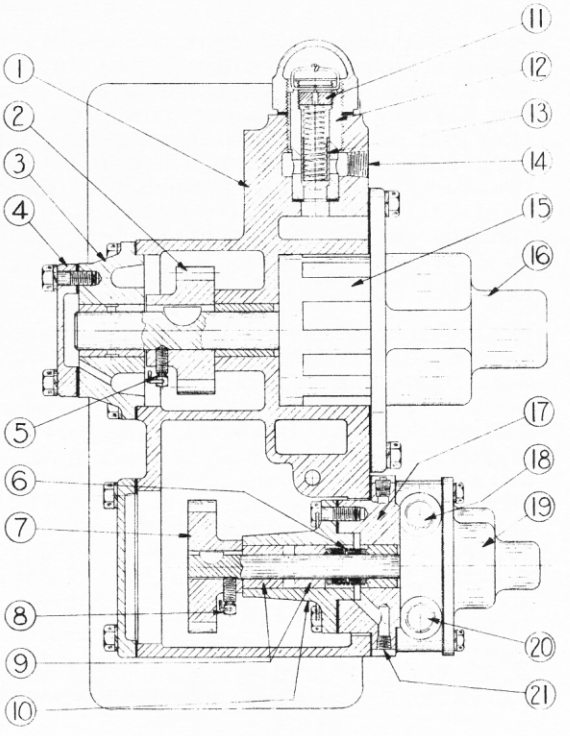

FIG. T-1

Referring to Fig. T-1 the spring for relief valve (13) should be adjusted for 40 to 50 lbs. per square inch oil pressure as indicated on the gage board. Adjustment is by means of plug (11) which is accessible after removal of the cover nut. After adjustment has been made plug (11) should be securely wired to relief valve body (12).

4. LUBRICATING OIL SUMP PUMP

The construction of the lubricating oil sump pump is similar to that of the pressure pump described in paragraph 3. The sump pump is however mounted in an adapter which in turn is mounted on the camshaft gear housing at the flywheel end of the engine. The adapter contains the pump shaft bearing bushings and a drive pinion is mounted on the extreme end of the pump shaft. This pinion meshes with the camshaft gear. After the sump pump assembly has been located for proper gear mesh the adapter is doweled to the camshaft gear housing.

5. LUBRICATING OIL FILTER

The filter is of the metal element type as shown on Fig. T-2. The elements are made up of flat metal ribbon wound around a central spool, adjacent layers being slightly separated from each other by raised

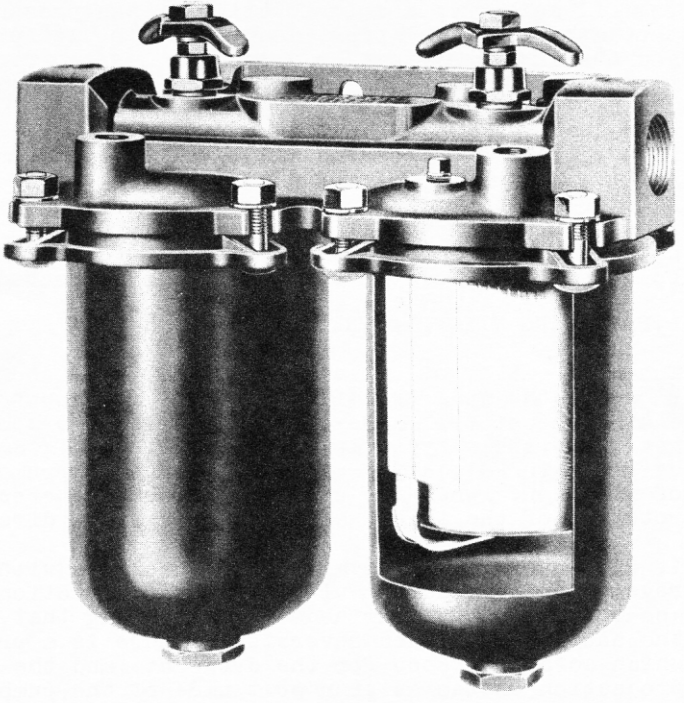

FIG. T-2

ridges running across the ribbon. The successive layers of the ribbon are spaced .003" apart and it is these spaces that form the filtering medium. The oil flows from the outside toward the center and leaves the dirt on the outside of the spool. The filter may be cleaned by turning the cleaning handles on top, which rotates a knife bearing on the edge of the windings, scraping off the dirt and allowing it to settle to the bottom of the sump tank. The filter should preferably be cleaned when the engine is not running so that the dirt may settle to the bottom, although there is no objection to cleaning with the engine running. Cleaning should be at sufficiently frequent intervals to prevent stoppage of oil flow and the sump tanks should be drained before the dirt in the bottom builds up to the level of the elements. Experience will determine the correct intervals.

6. LUBRICATING OIL COOLER

The construction of the Schutte & Koerting oil cooler is shown on Fig. T-3. It consists of a smooth bore cast iron shell to the ends of which are attached the in- and outlet header and the cross-over bonnet. Within the shell there is a bundle of straight tubes through which the cooling water passes. By removing in- and outlet header and loosening the nuts for the cross-over bonnet the tube bundle can be withdrawn to the left for inspection and cleaning.

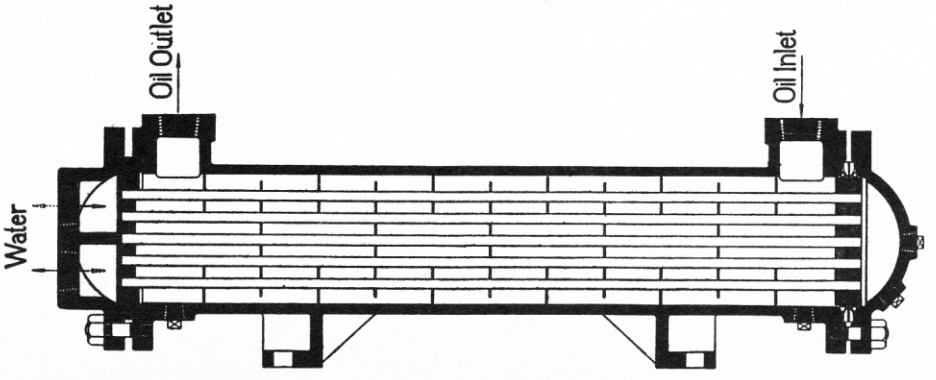

FIG. T-3

The oil enters the shell at the top on the cross-over bonnet end and passes transversely across the tubes between each baffle. As can be seen on Fig. T-3 every other baffle has a central hole, whereas on intermediate baffles the oil must pass between the outer circumference of the baffle and the inside of the shell. The oil stream must consequently pass the tubes at approximately right angles numerous times during its travel through the shell to the outlet. The cooling water enters at the bottom of the header and passes through the lower tubes to the cross-over bonnet, then returns through the upper tubes.

Only a part of the cooling water delivered by the water circulating pump passes through the oil cooler. Water is piped from the line connecting the circulating pump with the cylinder inlet header. The cooler outlet is connected to the exhaust valve cooling header and also to the middle section of the exhaust manifold water jacket. A regulating valve is provided in the last mentioned line and normally this valve should be closed or only slightly open. The temperature drop of the oil passing through the cooler should be approximately 10° F. and if this is not obtained the above mentioned valve should be opened.

The pipe leading to the cooler and the pipe from the cooler to the exhaust manifold water jacket are connected and a three-way cock is provided so that the cooler can be by-passed. Likewise the lubricating oil in- and outlet pipes are connected to a four-way cock permitting the lubricating oil to be by-passed also. After both of these cocks have been turned and the cooler drained the water in- and outlet pipes may be disconnected at the couplings provided and the tube-bundle can then be withdrawn for inspection or service. This should be done approximately every three months and the condition of the tubes noted.

7. LUBRICATOR AND DRIVE

The Madison-Kipp lubricator supplies a measured quantity of lubricating oil to the pistons, introduced at the center of the liner on each side. Nipples screwed into the liners and projecting through the cylinders and sealed thereto by packing glands carry the oil through the water jackets. It also feeds oil to the air compressor

cylinder.

The lubricator is fully described in the Madison-Kipp bulletin attached at the end of the book. Oil feeds to the pistons should be adjusted to 25-30 drops per minute when the engine is new, but this may be reduced to approximately 20 drops per minute after the pistons and rings have been well worn in. KEEP THE LUBRICATOR WELL FILLED WITH CLEAN OIL. Use the same oil that is used in the engine. Do not under any circumstances allow it to run dry as serious damage to the pistons and liners may result. This should be made a regular part of the engine room routine and should never be neglected. The lubricator is mounted on brackets on top of the reversing rack housing at the aft end of the engine. It is driven from an eccentric on the end of the camshaft.

COOLING WATER SYSTEM

1. Cooling water enters the engine at the circulating water pump suction. From the pump discharge it may flow directly into the cylinder inlet manifold, extending fore and aft at the bottom of the cylinders, or through the lubricating oil cooler and thence into the inlet manifold. The main water flow through the engine is into the cylinder jackets from the water inlet manifold, up through the jackets and into the heads through brass nipples screwed into the cylinders and sealed to the heads by rubber grommets. These grommets should be renewed whenever a head is pulled. The water from the heads is collected into the water outlet manifold, which discharges at the forward end into a pipe running back to the after end of the exhaust manifold water jacket. The flow through this manifold is again forward, through passover pipes at the joints between the manifold sections, to the outlet at the forward end. (On 10" and 10½" bore engines the water flows directly from the outlet manifold into the exhaust manifold at the forward end.)

   In addition to the main flow described above there are also four minor parallel circuits, as follows:

   1. The thrust bearing circuit, taking water from the inlet manifold or circulating pump discharge and discharging overboard after circulating through the thrust bearing water jackets. Passover pipes connect the thrust bearing cap to the bearing base.

   2. The air compressor circuit. Water is piped from a flange on the water inlet manifold to the compressor cylinder, into the compressor head through a passover pipe, and discharges into the after end of the water outlet manifold or exhaust manifold (engines with multi-collar thrust bearings only).

   3. On engines with 11½" or larger bore there is provided a fuel spray valve cooling circuit. Nozzles, discharging cool water directly against the spray valve bosses, are screwed into the cylinder head water jackets, and greatly reduce the tendency for coke to build up on the spray valve tips. The nozzles also prevent muck and scale from accumulating in the center of the heads around the valve bosses. The nozzles are fed from a manifold extending fore and aft just below the exhaust manifold. A globe valve in the line supplying water to this manifold from the water inlet manifold allows control of the spray valve cooling water. Since these nozzles discharge into the cylinder head water jackets there is no return line for this circuit.

   4. Engines with 11½" or larger bore have an exhaust valve cooling circuit which carries cooling water through the exhaust valve cages. The inlet and discharge manifolds are mounted directly above the main water outlet manifold. The water supply is taken from the pipe leading into the exhaust manifold water jacket, at the after end of the engine, and the discharge from the outlet manifold is overboard.

   On engines with 11½" or larger bore the bilge pump discharge is connected to the water inlet manifold by a three-way cock, and the engine may be temporarily run <u>at slow speed</u> on this pump if the main circulating pump is out of service. Provision should be made for connecting the suction to a sea chest if the pump is to be used in this way.

2. <u>DRAINING THE WATER JACKETS</u>

   If the engine is to be allowed to stand idle in freezing weather it must be drained completely. In addition to draining the engine the exhaust valve cages (if water cooled) must be removed and emptied. Also the cocks at the after ends of the exhaust manifold sections should be opened. The circulating water pump should be drained by removing the pipe plugs installed at the low points of both the suction and discharge chambers. The drain plug in the bottom of the lubricating oil cooler should also be removed and the water drained out.

3. PISTON TYPE CIRCULATING WATER PUMP (Engines with 13" or larger bore)

   For construction of the pump refer to the Parts Catalog Plate facing the "Circulating Water Pump" group list sheet. Referring to this plate the pump piston is connected by means of a piston rod, crosshead, connecting rod and strap to an eccentric on the crankshaft. The pump body is divided into two chambers so that each side of the piston acts as a separate pump. Each chamber has a separate set of disc type, spring loaded, suction and discharge valves.

The piston rod packing nut is easily accessible and can be tightened with a pin or drift. New packing can be installed after loosening the splash guard and sliding it out of the way. A hand hole in the outer end of the pump body permits inspection and servicing of the piston. However, if much work is to be done on the pump, it is recommended that the connecting rod be unbolted from the eccentric and the whole pump assembly removed from the centerframe.

The piston assembly is made up of two piston discs, separated by a spacer and faced with cup leathers. Brass washers, approximately five on each side, are let into the leathers between the pistons and spacers, so that the clamping is through metal only, and tne assembly cannot work loose due to compression of the leathers. It is important that these washers always be used on each side, and that the clamp nut be securely tightened and cotter pinned.

By removing the whole pump assembly as previously described and also the centerframe cover above the pump mounting, the crosshead and eccentric strap are made readily accessible for inspection or service. The strap which is babbitt lined, is fitted to the eccentric with a clearance of .006" - .010" on the diameter and is allowed a side clearance of .003" - .006". A bronze bushing is pressed into the crosshead end of the connecting rod for the wrist pin bearing. If replaced the new bushing should be reamed after pressing in to allow a clearance of .001" to .002" between the bushing and pins. The crosshead is reamed to a slightly smaller diameter, so that the clearance between crosshead and pin is .0005" to .0015".

Air chambers are provided to prevent water hammer, one on the suction and one in the discharge side of the pump. The chamber on the suction side is fitted with a ball check or snifter valve and a pet cock. When the pet cock is opened air is admitted to the chambers with each suction stroke of the pump. This valve should be opened as often as necessary to keep the chamber charged with air. Water hammer in the system indicates a lack of air in the chamber and the snifter valve should be opened. If pet cock is left open continuously it should be opened just enough to prevent water hammer. If left wide open the pump capacity is lowered and the engine may not receive enough cooling water.

A zinc block is bolted in the bottom of the pump suction chamber to protect the various metals from electrolytic action. This block should be replaced when about 75% dissolved. New blocks can be installed after removing either the air chamber elbow or the suction line flange from the suction chamber.

4. PISTON TYPE CIRCULATING WATER PUMP (Engines with 11½" or smaller bore.)

For construction of pump refer to Parts Catalog Plate facing the "Circulating Water Pump" group list sheet. The drive is by means of piston rod, cross head and connecting rod to a crank which in the case of 10" and 10½" bore engines is mounted on the end of the camshaft. On 11½" bore engines the crank is on the end of a jackshaft which is gear driven from the crankshaft.

For the functioning of the pump, servicing of the piston rod packing, and the piston construction see paragraph 3. Crank pins and cross head pins should slide freely in the corresponding connecting rod bushings. Allow about .0015" to .003" clearance.

AIR COMPRESSOR

1. SINGLE STAGE COMPRESSOR

On engines with 13" or smaller bore a single stage compressor is used. This air compressor is of the single acting type and is located at the after end of the engine. The cast iron, jacketed cylinder is bolted to the top of the centerframe directly behind number six cylinder. The cylinder head contains the spring loaded, disc type, suction and discharge valves. The compressor output is controlled by a diaphragm type suction valve unloader. This unloader is connected to the air tanks and when the pressure in these tanks reaches a pre-determined value, usually 225 lbs. per square inch, it acts to hold the suction valve open, thus cutting out the compressed air delivery. The unloader is mounted directly over the suction valve.

The piston, which is driven from the crankshaft by a connecting rod, strap and eccentric, is fitted to the cylinder with a clearance of .004" to .006". Five piston rings in all are used. Three 3/8" wide step cut compression rings are installed in grooves above the wrist pin and two 3/8" wide step cut, ventilated oil rings are placed below the pin. Side clearance is .0025" - .005" for all rings. The ring gaps should be .012" on the two top rings and .009" on all the lower rings.

The wrist pin is given a clearance of .000" to .001" in the pin bores and a clearance of .001" to .002" in the bearing assembly of the connecting rod. The pin is secured in the piston by a setscrew threaded into one of the pin bosses and locked by a jam nut. Shims between the foot of connecting rod and the strap allow for adjustment of the piston height. The top of the piston should be flush with the top of the cylinder when the cylinder is pulled down, and with the eccentric at top center. The strap is allowed a diametral clearance of .006" to .010" and a side clearance of .003" to .005".

2. TWO-STAGE COMPRESSOR

A two-stage single acting compressor is used on 14½" and 15" bore engines. It is located at the forward end of the engine and is bolted to the centerframe. A stepped piston is used which is driven by a connecting rod, strap and eccentric on the crankshaft. The piston and cylinder construction is shown on the Parts Catalog plates. It should be noted that the first stage is formed between the top of the piston and the cylinder head whereas the second stage is formed between the lower face of the piston step and the upper face of the cylinder step. The first stage or intermediate pressure is approximately 68 pounds per square inch and second stage pressure is the final discharge pressure of the compressor.

There are two lubricating oil holes on the air compressor cylinder which are combined into one lead to the mechanical oiler. It takes very little oil to lubricate the compressor and the mechanical oiler should be set for not more than one drop of oil per revolution of the oiler shaft. This will be a total of approximately 4 to 6 drops of oil per minute to the compressor if the engine is running at full speed. Under no circumstances should this amount of oil be increased.

The intermediate cooler, which is cast integral with the cylinder body, is provided with a safety valve set at 100 pounds per sq. inch. It is mounted on the side of the cylinder. If this safety valve pops the first stage discharge valves may be sticking or leaky, or the 2nd stage suction valve may not perform its function properly. Do not allow the intermediate stage safety valve to pop. If this happens, check the above mentioned valves and correct the trouble.

The lower portion of the intermediate cooler forms a water trap for the condensate which forms when the air is cooled. A drain is provided for this water. The drain line is carried out to the forward end of the engine where a cock is provided for draining purposes. The air compressor intermediate cooler should be drained at regular intervals, as otherwise the water which is formed will be carried into the 2nd stage. The water trap portion of the intermediate cooler holds approximately 2 quarts, and the drainage periods should be spaced at such intervals that less than this amount is drained out at one time.

The compressor output is controlled by a diaphragm type suction valve unloader acting on one of the first stage suction valves. The unloader should be connected to the air tanks and when the pressure in these tanks reaches a predetermined value, usually 225 lbs. per square inch, one suction valve is held open, thus cutting out the first stage air delivery. Due to the large clearance volume in the second stage no air will be delivered by this stage when the intermediate pressure is atmospheric. Consequently the first stage suction valve unloader controls the total output of the compressor. The unloader is mounted on a small cover over the first stage suction valves.

The piston is provided with four compression rings on its large diameter and four compression and one oil control ring on the smaller diameter lower part. The oil control ring is mounted below the piston pin. The side clearance in the ring grooves should be .003" to .005" for all rings. The rings gap on all the large diameter rings and the two upper small diameter rings should be .016". The other rings should have a gap clearance of .012".

The case hardened and ground piston pin is stepped, with differential fits in the piston pin bosses. The fits are .0005" to .0015" press on the small end and metal to metal to .0015" loose on the large end. Rotation of the pin in the piston is prevented by the engagement of a dowel which projects radially from the large end of the pin with a groove in the bottom of the boss. A setscrew threaded into the smaller pin boss enters an indentation in the pin to act as a retainer. The setscrew is in turn secured by a locknut. A piston pin clearance of .0015" to .0025" is allowed in the connecting rod bushing.

Shims between the foot of the connecting rod and the top of the eccentric strap allow for adjustment of the piston height. The top of the piston should be flush with the top of the cylinder when the piston is on top dead center. The cylinder nuts should be tight when making this adjustment. No adjustment is provided, or necessary, for second stage clearance. All that is required is that the top of the piston be flush with the top of the cylinder in accordance with above instructions. The eccentric strap is allowed a diametral clearance of .006" to .009" and a side clearance of .005" to .008".

The construction of the suction and discharge valves is clearly shown on the parts catalog plate facing the "Cylinder and Head" group list sheet. Note that the suction valves are provided with spring retainers which screw on the ends of the valve stems. The retainers are locked by means of snugly fitting cotter pins and should be screwed down to allow a maximum suction valve lift of 1/8". On the first stage suction valves particularly, it is important that the spring retainer cotter pin fits snugly in the valve stem hole. Cotter pin should not be smaller than 1/8" dia. and should be long enough to allow the ends to be bent over so that pin will be securely locked. The small cover over the first stage suction valves in the cylinder head should be removed approximately once a month to make sure that the valve spring retainers are securely locked by their cotter pins. If the cotter pins should work out the spring retainers might unscrew allowing the suction valves to drop down into the cylinder with consequent damage to piston and head.

MAINTENANCE & INSPECTION

1. GENERAL RULES

Observing the following general rules will go a long way toward insuring satisfactory and trouble-free operation. Refer to preceding sections for detail instructions.

KEEP YOUR ENGINE CLEAN

Inspect the engine regularly and keep it wiped clean. If oil is left standing it quickly hardens and must be washed or scraped off. It is much easier to keep the engine clean than to get it clean, and there is always less trouble with a clean engine than with one that is covered with oil and dirt.

LEAVE WELL ENOUGH ALONE

When the engine is running satisfactorily and smoothly, do not continually try to better the operation with minor adjustments.

NEVER ALLOW YOUR ENGINE TO SMOKE

When the exhaust from an engine is smoky it clearly indicates that combustion is not perfect and that residue, in the shape of smoke, is clinging to the oily surfaces of the cylinders, pistons, piston rings, valves, etc. When this happens you are creating trouble for yourself and doing an injustice to the engine. Therefore, the first thing in consideration of the operation of a Diesel engine is: DO NOT ALLOW YOUR ENGINE TO SMOKE

KEEP A COMPLETE LOG OF ENGINE OPERATION

A complete log should always be kept of the engine operation, and back sheets should be consulted frequently and compared with present conditions. In this way gradual changes can be detected and investigated and insignificant troubles corrected before becoming real ones. Any unusual noises or other irregularities should be logged so that they will be investigated at the regular routine inspections.

INSPECTING REPAIRS

At completion of any adjustment or repair job, always make a thorough inspection to see that all parts have been correctly replaced, that bolts and nuts are tight, and that all cotter pins and locking wires are in place. If work involved rotating parts, bar engine around at least two full revolutions (so that camshaft is turned one revolution) to be sure that all parts are clear. Be sure that no tools or rags are left inside the engine.

2. SMOKY EXHAUST

Smoky exhaust indicates defective combustion which is usually due to one of the following causes:

(a) Excessive carbon on spray valve tips.

(b) Leaking spray valve.

(c) Leaky exhaust, inlet, or air starting valves.

(d) Buffer springs may be incorrectly adjusted.

(e) Fuel cam or roller may be worn.

(f) Leaky or stuck piston rings.

(g) Uneven cylinder load balance.

If exhaust smoke is not even but occurs in the form of puffs it is likely that the combustion is defective in one or two cylinders only. Where the trouble lies can usually be determined by cutting out spray valves one at a time. When this is done however, the engine should not carry more than about 3/4 load or the remaining cylinders will be overloaded.

3. INSPECTION AND MAINTENANCE ROUTINE

The following routine for regular inspection and maintenance work is suggested as a guide for the operator, but experience with the engine over a period of time may indicate changes that should be made in the schedule.

It will be noted in the following schedules that spray valve cleaning has not been included. It is believed the spray valves should be cleaned only when necessary, rather than at definite intervals. The necessity for cleaning will be indicated by increased or uneven exhaust temperatures or smoky exhaust and at either of these indications the spray valves should be inspected and cleaned, if necessary.

In the following, work to be done under each routine should include work listed under preceding routines. For example, work under "Annual Routine" includes everything listed under all other routines.

4-HOUR ROUTINE

(a) Hand oil the following points:

1. The inlet and exhaust valve stems.
2. The rocker arms at their fulcrums and at their push rod ends.
3. Inlet and exhaust lifters, fuel wedges, lifter and buffers.
4. Wedge shaft bearings.
5. Tachometer drive.
6. Bilge pump connecting rod - both ends.
7. Mechanical lubricator drive lineage.

For oiling the inlet and exhaust valve stems it is preferable to use penetrating oil. If this is not available a mixture of equal parts of engine lubricating oil and kerosene may be used. (a mixture of two-thirds engine fuel oil and one-third lubricating oil can be used in an emergency.) For all other points in above schedule use engine lubricating oil.

(b) Check the oil level in the mechanical lubricator. Fill the lubricator with clean engine oil of the grade used in the engine when necessary.

(c) Turn the handle of the lubricating oil filter.

(d) Turn the handle of the fuel oil filter.

Always turn filter handles immediately after stopping the engine.

DAILY OR 24-HOUR ROUTINE

(a) Clean out the sump tanks of the lubricating oil and fuel oil filters.

(b) Hand oil the air brake.

(c) Grease the control handle shaft with cup grease.

200 TO 300-HOUR ROUTINE

(a) Check intake and exhaust valve timing.

(b) Check spray valve timing. (After starting engine check cylinder load balance.) (See Section O)

(c) Clean out lubricating oil day tank if lubricating oil is dirty or dark in color.

(d) Remove crankcase doors and inspect connecting rods. Be sure that all connecting rod bolts are tight and that everything is in order. Inspect lower part of cylinder liner bore.

(e) On engines equipped with cartridge type filters these may or may not need replacement. The time between replacements will vary with the type of lubricating oil used and with the operating conditions to which the engine is subjected. When the lubricating oil turns black rapidly following an oil change, the filter cartridge should be repacked or changed.

SEMI-ANNUAL ROUTINE

(a) Pull cylinder heads and pistons, remove rings and clean pistons and grooves thoroughly. Check rings for side and end clearance.

(b) Examine cylinder liner walls. Watch for shoulders due to ring travel.

(c) Grind intake and exhaust valves. Check valve springs for length and tension and for defects.

(d) Recondition spray valves. Inspect stem packing and repack if necessary. Inspect stem for wear and replace if worn. Inspect and clean spray valve tips. Grind stem to tip.

(e) Inspect main and connecting rod bearings. Check clearances and inspect bearing surfaces. Adjust clearances if necessary.

(f) Inspect gear train carefully, observing backlash, indications of wear on teeth, and clearance on intermediate gear bearings.

(g) Inspect camshaft and latch shaft assemblies. Watch for worn or loose cams, loose or worn rollers or pins on the lifters. Be sure all keys and lock bolts are in place and tight.

(h) Inspect water pump and renew zinc if necessary.

(i) Inspect air reversing cylinder. If piston leathers are hard soak in penetrating oil.

(j) Disassemble lubricating oil cooler and inspect for corrosion. Clean thoroughly before reassembling. Renew zincs if necessary.

(k) Check propeller shaft coupling bolts and thrust bearing and flywheel clamp bolts.

(l) Check all hold-down bolts between engine and foundation. If they are loose check the engine alignment.

ANNUAL ROUTINE

(a) Check crankshaft and thrust shaft alignment. If shaft needs realignment it is recommended that the work be done by an experienced and careful mechanic.

(b) Examine cylinder jackets and exhaust manifold water jackets. If scale is over 1/16" thick it should be removed by scale remover solution.

(c) Remove and inspect lubricating oil and fuel oil transfer pumps. Note conditions of bearings, shafts and seals. Replace if necessary.

(d) Remove top cover and mounting plate on high pressure fuel pump. Note condition of pump plungers and barrels. Disassemble crossheads and connecting rods and inspect for wear. Inspect suction and discharge valves and grind seats. Check valve lifts.

(e) Disassemble governor and inspect carefully all moving parts for wear and signs of distress. Inspect entire linkage between governor and wedge shaft for lost motion and wear. Fuel wedges, links and pins should also be inspected for wear and replaced if necessary.

(f) Inspect Mechanical Lubricator and connections to cylinder liners. Inspect ratchet mechanism for wear and proper functioning. Hand crank lubricator and observe the feed to each liner. Watch for water leaks at the nipples going through the water jackets.

(g) Clean out crankcase thoroughly. Be sure that all cleaning solution is drained out after cleaning is completed.

4. TABLE OF CLEARANCES

In the following tabulation the "Nominal Clearances" are the average clearances applying to new parts as fitted at the factory. When "Maximum Clearances" have been reached due to wear parts should be replaced or adjusted.

	Nominal Clearance	Maximum Clearance
Main Bearings and Connecting Rod		
Journal to Main Bearing	.008"	.014"
Crankpin Journal to Bearing - radial clearance	.0075"	.012"
Crankpin Journal to Bearing - end clearance	.010"	.025"
Piston Pin to Pin Bushing in Connecting Rod	.004"	.008"
Side Clearance in Piston	5/16"	
Power Piston		
Piston to Piston Pin - large pin dia.	.001"	.003"
Piston to Piston Pin - small pin dia.	.001" press fit	
Piston to Liner - skirt clearance	.015"	.030"
Top of Piston to Liner	.083"	
Piston Ring Gap Clearance - two top rings	.070"	.110"
Piston Ring Gap Clearance - all lower rings	.044"	.090"
Piston Ring - clearance in grooves	.004"	.008"
Camshaft		
Camshaft to Bearings	.005"	.012"
Camshaft End Clearance	.015"	.035"
Valve Gear		
Exhaust Valve Stem to Guide	.004"	.015"
Inlet Valve Stem to Guide	.0035"	.015"
Rocker Shaft to Rocker Bushing	.0025"	.008"
Rocker Roller to Pin	.001"	.004"
Valve Lifters to Guides	.002"	.006"
Valve Lifter Rollers to Pins	.002"	.004"
Latch Pins to Rollers	.0015"	.004"
Timing Gears		
Backlash - All Gears	.006"	.012"
Intermediate Gear Brg. to Pin - radial clearance	.003"	.006"
Intermediate Gear Brg. - end clearance	.010"	.025"
Lubricating Oil Pumps, Fuel Transfer Pump		
End clearance of Gears in Housing	.001"	.003"
Pump Shaft to Pump Bearings	.0018"	.004"
Circulating Water Pump		
Eccentric to Strap - radial clearance	.008"	.020"
Eccentric to Strap - end clearance	.0045"	.012"
Crosshead to Crosshead Guide	.0045"	.010"
Crosshead Pin to Crosshead Bearing	.001"	.003"
Crosshead Pin to Connecting Rod Bearing	.0015"	.005"
Bilge Pump		
Plunger to Cylinder	.003"	.015"
Connecting Rod to Crank Pin	.002"	.008"
Connecting Rod to Plunger Pin	.0015"	.008"
Plunger to Plunger Pin	.0015"	.008"
High Pressure Fuel Pump		
Crank Pin to Connecting Rod - radial clearance	.002"	.005"
Crank Pin to Connecting Rod - end clearance	.007"	.015"
Crosshead Sleeve to Guide	.003"	.005"
Crosshead Pin to Crosshead	.001"	.003"
Air Compressor		
Eccentric to Strap - radial clearance	.008"	.020"
Eccentric to Strap - end clearance	.004"	.008"
Piston Pin to Connecting Rod Bearing	.002"	.005"
Piston to Cylinder (1st stage)	.008"	.013"
Piston Rings - gap clearance - top rings	.016"	.035"
Piston Rings - gap clearance - lower rings	.012"	.030"
Piston Rings - side clearance in grooves - all rings	.0035"	.006"

FOREWORD

This Parts Catalog has been compiled to serve the dual purpose of providing a means for ordering parts and to furnish illustrations to aid in the dismantling and reassembling of the various units of the engine.

This Parts Catalog is made to conform to the original construction of the engine, and the Atlas Imperial Diesel Engine Co. does not assume the responsibility or obligate itself to maintain this catalog to conform to any subsequent changes made on the engine after it leaves the factory. Complete records of all changes and service orders for each engine are maintained at the factory in an effort to always supply correct parts, but due to occasional substitution of parts in the field, of which we have no knowledge, and the fact that we have no assurance that parts furnished from the factory are installed, we cannot guarantee the furnishing of correct parts.

The right is reserved to change the construction or material of any part or parts without incurring the obligation of installing such changes on engines already delivered.

INSTRUCTIONS FOR ORDERING PARTS

Always furnish Engine Number when ordering parts or when communicating with factory or agency. This number will be found on name plate located on operating side of engine. It is VERY NECESSARY THAT THE ENGINE NUMBER BE GIVEN as it helps to insure the furnishing of correct parts and is also the means whereby the factory service records of each engine are maintained.

Always give PART NUMBER, PART NAME AND QUANTITY. If part has no Part Number then give a COMPLETE DESCRIPTION AND SIZE OF PART.

Be particular to state POST OFFICE ADDRESS, TOWN, COUNTY and STATE to which parts are to be shipped.

Specify how merchandise is to be shipped--whether by FREIGHT, EXPRESS or PARCEL POST.

Confirm all Telephone and Telegraph orders in writing.

Claims for shortages or errors must be made within five days from the receipt of goods or same will not be considered.

Broken or damaged goods should be refused, or a complete description made of damage by the carrier agent on the freight bill. If this is done, full damage can generally be collected from the transportation company.

No responsibility is assumed for delay or damage to merchandise while in transit. Our responsibility ceases upon delivery of shipment to the transportation company, from whom a receipt is received showing that shipment was in good condition when delivered to them; therefore, claims if any, should be made with the transportation company and not with the Atlas Imperial Diesel Engine Co.

Code Address: "ATGAS" - OAKLAND --- Codes: BENTLEY'S - PRIVATE

INSTRUCTIONS ON "HOW TO USE PARTS CATALOG"

In order TO LOCATE PART NUMBERS it is IMPERATIVE that the person concerned thoroughly understands the makeup of this book. He should CAREFULLY READ THE INSTRUCTIONS given on this and the following page, and thoroughly familiarize himself with the necessary steps involved. Particularly is this important when sub-assemblies are involved.

DO NOT ORDER PARTS BY REFERENCE NUMBERS as these numbers sometimes change and wrong parts might be supplied.

This catalog is made up of four basic sections, as follows:-

1. INDEX SHEET -- This sheet lists the various groups into which the engine is divided and must be used for obtaining the group sheet number.

2. GROUP LIST SHEET -- This sheet lists the parts which comprise the group, and are numbered with the prefix "L" or "2L".

3. PLATE (OR LINE DRAWING) -- Plates are arranged to face the group sheet to which they apply, and in most cases shows only the parts listed in the group. Occasionally a plate may include two or more groups making it necessary to always first obtain the group number from the index. If this is not done you may by chance turn to a plate showing the part wanted but will not find it listed on the group sheet facing this plate.
   NOTE:----- If no plate is found facing the group sheet, then the part wanted can be identified by the description. This will apply mainly to piping, and in this connection the actual pipe and fittings on the engine should always be measured and then ordered accordingly, due to unavoidable variations between engines.

4. SUB-ASSEMBLIES -- The term "Sub-assembly" (or the Word "Assembly" appearing in the part name) is used to indicate parts which are made up of two or more parts (or pieces) and yet must be considered as a unit part. For example, parts that are welded together, parts that have bushings pressed in, or parts that have to be machined together.
   A Sub-assembly list will be found immediately following the last group sheet, and itemizes the various parts used in each assembly. These assemblies are arranged in numerical sequence and always have the prefix "X", "G" or "GA" in the assembly number.
   NOTE:----- Certain parts of assemblies indicated by an "*" in place of a reference number, are not sold individually, and if wanted, the complete assembly must be ordered.

REFERENCE NUMBERS ON PLATES OR ASSEMBLY DRAWINGS

SINGLE NUMBERS or the TOP NUMBER (when more than one number appears in the circle) refers directly to a corresponding number on the group list sheet.

A circle with MORE THAN ONE NUMBER indicates part in question is a component part of a sub-assembly. The top number will refer to a corresponding number on the group list sheet, and the lower number will refer to a corresponding number in the sub-assembly.

TO FIND A PART WITH TWO REFERENCE NUMBERS IN THE CIRCLE PROCEED AS FOLLOWS:- (NOTE:- Select a part on any plate and follow step by step as explained.)

1st -- Using the top number in the circle locate corresponding reference number on the group list sheet, which will be an assembly ("X" or "G" number).

2nd -- Using the Part Number ("X" or "G" No.) of the assembly locate same in the numerical assembly list at rear of book.

3rd -- Refer back to the plate and obtain the second or lower number in the reference circle, then locate this number in the reference number column of the sub-assembly, and this will be the part desired.

If there are MORE THAN TWO NUMBERS in the reference number circle, proceed exactly as outlined above, only this time the part in the first assembly located will be another sub-assembly, so therefore it will be necessary to find the second assembly, and then referring back to the plate take the third number in the reference circle and match it with the corresponding number in the second assembly.

The following page will show a typical example and illustrate the above explanation step by step.

The following illustrated example will show the procedure as explained on opposite Page, for finding parts involved in sub-assemblies.

For this illustration assume that the part number for the Cylinder Head Cleanout Cover is wanted:-

We know that this cover would be listed with the "Cylinder Head" so we turn to the Index Sheet and locate the "Cylinder & Head Group" which gives us the sheet number.

PARTS CATALOG ---- INDEX — ENGINE NO. 11830
6 Cyl. 13 x 16 Marine Engine

	No. Req'd.	Group No.
BASE SECTION		
Base -- (Studs - Covers - Bearing Caps Etc.).....	1	2L27
Base Oil Piping-(Main Manifold - Crank Brg.Oil Lines).	1	2L629
Crankshaft & Flywheel -- (Thrust Shaft & Bearing).....	1	2L30
CYLINDER & VALVE MECHANISM SECTION		
Cylinder & Head.....	6	L-9776
Valve Rockers & Push-Rods.....	6	L-9777
Valve Lifters & Guide.....	6	L-6919
Piston & Connecting Rod.....	6	2L351

We find the sheet number for this group to be L-9776, and now we turn to this sheet and opposite we find a Plate or group drawing.

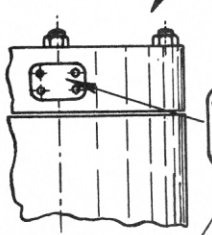

ALWAYS GIVE PART NUMBER—PART NAME—ENGINE NUMBER
FOR STD. HARDWARE WITHOUT PART NUMBER GIVE DESCRIPTION AND SIZE
* INDICATES PART NOT SERVICED INDIVIDUALLY

L-9776
PLATE NO. K-1890

REF. NO.	*	PART NO.	NO. REQD.	PART NAME [ASSEM. DRWG. NO.]
1		X1283	1	CYLINDER ASSEMBLY
2		753A-FB4	4	WASHER - Cyl. to Centerframe Stud
3			4	NUT -- 1 3/4-5-NC-Hex. - - (Steel)
4		X2810	1	HEAD ASSEMBLY - Cylinder
5		C-3957	1	GASKET - Head to Cylinder
6		610A-03	8	GROMMET - Cyl. to Head Water By-Pass Pipe
7			8	NUT -- 1 1/2-6-NC-Hex. - - (Steel)
8		785	1	FLANGE - Cyl. Head Water Outlet Hole (Blind)

NAME CYLINDER & HEAD GROUP
ORIGINALLY ISSUED FOR 13 x 16 MAR. - STAT.
FOR TOTAL REQUIREMENTS PER ENGINE MULTIPLY NO. REQ'D GIVEN ABOVE BY NO. REQ'D FOR THIS GROUP GIVEN ON INDEX SHEET

PARTS LIST — ATLAS IMPERIAL DIESEL ENGINE CO. OAKLAND, CALIF. MATTOON, ILL.

L-9776

Looking at the Plate we locate the part we want and find the reference number to be 4-1-8. We now take the top number "4" and match this with the reference number "4" on the group list sheet. We find this to be X2810 Head Assembly, so that this assembly must next be found in the sub-assembly list at rear of book.

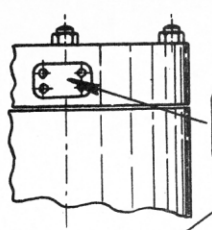

SUB-ASSEMBLY LIST

REF. NO.	PART NO.	NO. REQD.	NAME
	X2810		HEAD ASSEM. - CYLINDER -- Includes
1	X2818	1	HEAD ASSEM.
2	X2811	1	VALVE & CAGE ASSEM.
3	X2812	1	VALVE & CAGE ASSEM.
4	C-2155L5	2	RING - Piston

After finding assembly X2810 in sub-assembly list, we now take the second of the reference numbers in the oval which is "1" and match this with the corresponding number of the sub-assembly. We find this to be X2818 Head Assembly so we now have to proceed to this assembly.

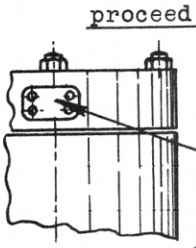

SUB-ASSEMBLY LIST

REF. NO.	PART NO.	NO. REQD.	NAME
	X2818		HEAD ASSEM. - CYLINDER -- Includes
*		1	HEAD CYLINDER
*		6	PIPE PLUG -- 1 1/4 Std.
1	C-5520L5	4	STUD - In. & Exh. Cage
2	S-3060	2	STUD - Air Valve Cage
7	C-447	2	NOZZLE - Cooling
8	C-8214	2	COVER - Cleanout (Blind)

After this assembly X2818 is found we now take the bottom reference number in the oval which is "8" and match this with the corresponding reference number in X2818. We now have the unit part which we want.

Spec. #1503-1 MS-44 & 48

PARTS CATALOG ---- INDEX

6 CYL. 15 x 19 Marine Engine

ENGINE NO. 11885

	No. Req'd	Group No.
BASE SECTION		
Base -- (Studs - Covers - Bearing Caps Etc.)	1	2L829
Base Oil Piping-(Main Manifold - Crank Brg. Oil Lines)	1	L-9710
Crankshaft & Flywheel -	1	2L830
Sailing Clutch & Thrust Bearing -	1	2L831
Flywheel Air Brake	1	L-9664
CENTERFRAME SECTION		
Centerframe & Covers -- (Covers - Studs - Breather)	1	L-9583
Intermediate Gear	1	L-9706
Camshaft -- (Bearings - Fuel Pump Crank - Gears)	1	L-9661
Cams	6	L-9663
Latches & Shaft	1	L-9666
CONTROL SECTION		
Reversing Rack Housing & Covers	1	L-9670
Reversing Rack & Air Cylinder	1	2L185
Engine Control Housing & Covers	1	2L870
Engine Control Handle & Valve	1	2L874
Rack Lock & Interlock Mechanism	1	L-9686
CYLINDER & VALVE MECHANISM SECTION		
Cylinder & Head	6	2L460
Valve Rockers & Push-Rods	6	2L461
Valve Lifters & Guides	1	L-9660
Piston & Connecting Rod	6	2L556
Fuel Spray Valve	6	L-9579
Spray Valve Tip .... ---- Part No. 6178 ----	6	
MANIFOLD SECTION		
Inlet & Exhaust Manifolds	1	2L732
Air Starting Manifold	1	2L698
Water Inlet Manifold	1	L-9675
Water Outlet Manifold	1	L-9677
Spray Valve Drain Manifold	1	L-8741
PUMP SECTION		
Fuel Pump Housing & Covers	1	L-8664
Priming & High Pressure Fuel Pumps	1	2L466
Lube Press. & Fuel Transfer Pumps	1	2L699
Lube Press. & Fuel Transfer Pump Housing & Covers	1	L-9652
Lube Oil Pump (Sump)	1	L-9668
Circulating Water Pump	1	L-9984
Bilge Pump	1	L-9766
GOVERNOR SECTION		
Governor & Housing	1	2L464
Governor Control Linkage	1	L-9724
Fuel Wedge Shaft	1	2L183
Fuel Wedge Shaft Control Linkage	1	L-9728
FUEL SYSTEM -- (Rail - Accumulator - Filter Etc.)	1	2L468
AIR COMPRESSOR SECTION		
Cylinder & Head	1	2L730
Valve Chamber - #2 Stage	1	L-9655
Piston - Connecting Rod - Eccentric Strap	1	L-9656
MISCELLANEOUS SECTION		
Lubricator -- (Lubricator - Drive)	1	L-9680
Lubricator & Miscellaneous Oil Piping	1	L-9695
Lube Oil Pressure Piping	1	L-9702
Lube Oil Pressure Piping	1	L-9703
Lube Oil Pressure Piping	1	L-9704
Water Piping	1	L-9696
Water Piping	1	L-9697
Water Piping	1	L-9698
Cooler - Lube Oil	1	L-8749
Air Piping	1	2L418
Air Piping	1	2L832
Pressure Gages	1	L-9674
Tachometer Drive	1	L-9741
Revolution Counter	1	2L917

NOTE:- When Ordering Parts Substitute the Following for those Listed:-
Tee - Cyl. Press. Relief Valve -- 2C2544
Gage Board & Braces are Special - Order by Description only.

Issue #1 - Kingsbury Bulletin & Sailing Clutch (W-1991-P)

Spanish Instructions

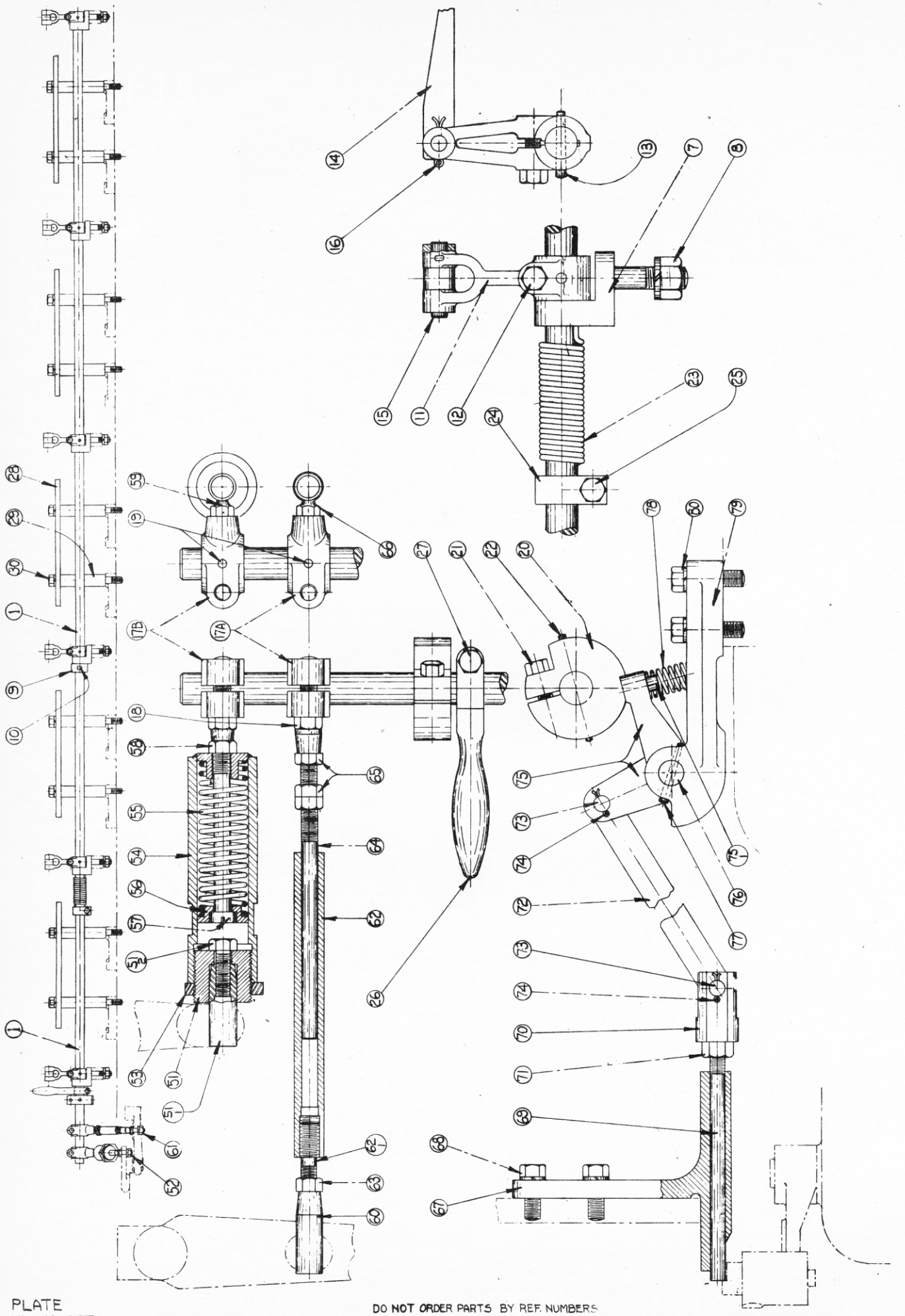

PLATE
No.- K-1807

DO NOT ORDER PARTS BY REF. NUMBERS

COPIES TO

CHANGES
#1 4-9-40
#2 9-25-41 Line 7 Part No. Was C-9311
#3 1-12-42 Added Part No. 2C2829 - Line 14 No. Req'd. Was 2
#4 1-21-42 Line 13 Part No. Was 2C2829

CHANGES

PARTS ATLAS

ALWAYS GIVE PART NUMBER—PART NAME—ENGINE NUMBER
FOR STD. HARDWARE WITHOUT PART NUMBER GIVE DESCRIPTION AND SIZE
* INDICATES PART NOT SERVICED INDIVIDUALLY

2L183

PLATE NO. K-1807

LINE NO.	DRWG. NO.	REF. NO.	*	PART NO.	NO. REQD.	PART NAME	ASSEM. DRWG. NO.
1		1		F-6234	1	SHAFT - Fuel Wedge	
2		7		C-9310	6	BEARING - Fuel Wedge Shaft	
3		8			6	NUT -- 1/2-13-NC-Hex. - - (Steel)	
4		8			6	LOCKWASHER -- 1/2 SAE Reg. - - (Steel)	
5		9		C-7549	1	COLLAR - Fuel Wedge Shaft Retainer	
6		10			1	SETSCREW--$\frac{1}{4}$-20-NC x $\frac{1}{2}$ Lg.-Sq.Hd. Cup Pt.-(St.)	
7		11		2C2615	6	FORK - Fuel Wedge	
8		12			6	CAPSCREW -- 3/8-16-NC x 1 1/4 Lg. - (Steel)	
9		13			6	TAPER PIN (Wedge Fork)--#3 x 1$\frac{1}{2}$ Lg.-(Steel)	
10	F-897	14		1132-E	6	WEDGE - Fuel	
	S-752	15		1132A-E	6	PIN - Fuel Wedge to Fork	
12		16			6	COTTER PIN -- 1/8 x 1 Lg. - (St.)	
13		17A		2C2808	1	LEVER - Fuel Wedge Hand Control (On Wedge Shaft)	
14		17B		C-9331	1	LEVER - Wedge Shaft Control (On Wedge Shaft)	
15		18			2	CAPSCREW(Clamp)--3/8-16-NC x 1$\frac{1}{4}$ Lg.-(Steel)	
16		19			2	TAPER PIN -- #3 x 1 1/2 Lg. - (Steel)	
17		20		C-9618	1	COLLAR - Fuel Wedge Hold-out	
18		21			1	CAPSCREW -- 3/8-16-NC x 1 1/4 Lg. - (Steel)	
19		22			1	TAPER PIN -- #3 x 2 3/4 Lg. - (Steel)	
20							
21	C-43	23		1135-E-LH	1	SPRING - Fuel Wedge Shaft	
22		24		C-8170	1	CLAMP - Fuel Wedge Shaft Spring	
23		25			1	CAPSCREW -- 3/8-16-NC x 1 1/4 Lg. - (Steel)	
24		26		C-8268	1	HANDLE - Fuel Wedge Throw-out	
25		27			1	CAPSCREW -- 5/16-18-NC x 1 Lg. - (Steel)	
26							
27		28		C-9527	5	GUARD - Fuel Wedge Shaft	
28		29		C-9528	10	SPACER - Fuel Wedge Shaft Guard	
29	C-2408	30		C-2408L6 1/2	10	CAPSCREW - Guard & Lift. Guide to Centerframe	
30		30			10	LOCKWASHER -- 1/2 SAE Reg. - - (Steel)	
31							
32							
33							
34							
35							
36							
37							
38							
39							
40							
41							
42							
43							
44							
45							
46							
47							
48							
49							
50							

FOR OPP. HAND SEE 2L184

FOR OPP. ROT. SEE

NAME FUEL WEDGE SHAFT GROUP

ORIGINALLY ISSUED FOR 6 CYL. 14$\frac{1}{2}$x18 - 15x19 MAR.-R.H.

FOR TOTAL REQUIREMENTS PER ENGINE MULTIPLY NO. REQ'D GIVEN ABOVE BY NO. REQ'D FOR THIS GROUP GIVEN ON INDEX SHEET

PARTS LIST

ATLAS IMPERIAL DIESEL ENGINE CO.
OAKLAND, CALIF. MATTOON, ILL.

FORM NO. 240 10-39

2L183

PLATE
No.-K-1808

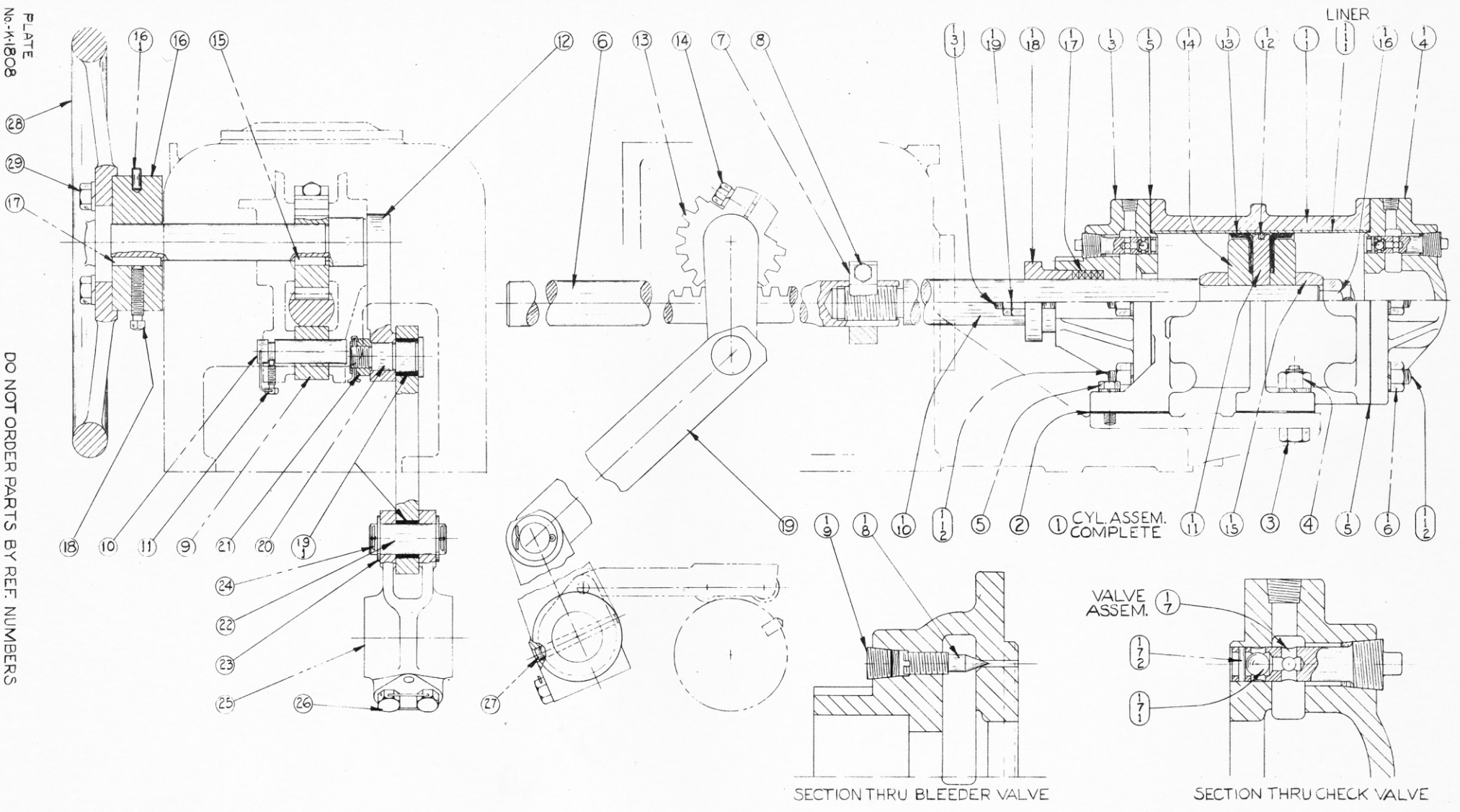

DO NOT ORDER PARTS BY REF. NUMBERS

EXTRA COPIES TO

TYPED BY JN DATE 1-30-40 ISSUED BY TBR DATE 1-30-40 CHKD TBR APRVD.

PARTS CATALOG CHANGES

CHANGES

ALWAYS GIVE PART NUMBER—PART NAME—ENGINE NUMBER
FOR STD. HARDWARE WITHOUT PART NUMBER GIVE DESCRIPTION AND SIZE
* INDICATES PART NOT SERVICED INDIVIDUALLY

2L185

PLATE NO. K-1808

ASSEM. DRWG. NO. K-1438

LINE NO.	DRWG. NO.	REF. NO.	*	PART NO.	NO. REQD.	PART NAME
1		1		X3057	1	CYLINDER ASSEM. - Reversing Rack Air
2	C-9364	2		C-9364-B	2	SHIM - Air Cyl. to Housing - (1/32)
3	C-9364	2		C-9364-D	4	SHIM - Air Cyl. to Housing - (.010)
4	C-9364	2		C-9364-E	8	SHIM - Air Cyl. to Housing - (.003)
5	C-2712	3		C-2712L2 1/2	2	BOLT - Air Cylinder to Housing
6		4			2	NUT -- 3/4-10-NC-Hex.- (Steel)
7		4			2	LOCKWASHER -- 3/4 SAE Reg. - - (Steel)
8		5			2	CAPSCREW -- 1/2-13-NC x 1 1/2 Lg. -- (Steel)
9		5			2	LOCKWASHER -- 1/2 SAE Reg. - - (Steel)
10		6		W-1299	1	RACK - Reversing
11		7		C-9376	1	CLAMP - Reversing Rack to Air Cylinder
12		8			1	CAPSCREW -- 1/2-13-NC x 1 3/4 Lg. - (Steel)
13		8			1	LOCKWASHER -- 1/2 SAE Reg. -- (Steel)
14		9		C-9370	1	ROLLER - Reversing Rack Guide
15		10		C-9371	1	PIN - Reversing Rack Guide Roller
16	C-9450	11		C-9450L1 1/8	1	SCREW - Reversing Rack Guide Roller Pin Lock
17					1	WIRE - #16 Ga. x 6 Lg. - - (Steel)
18		12		W-1288	1	CRANK - Latch Shaft Control
19		13		C-9375	1	PINION - Reversing Rack
20		14			1	CAPSCREW -- 5/8-11-NC x 2 1/4 Lg. - (Steel)
21		14			1	LOCKWASHER -- 5/8 SAE Reg. -- (Steel)
22	C-6908	15		C-6908L1 3/8	1	KEY - Pinion to Crank
23	C-9494	16		X2582	1	COLLAR ASSEM. - Latch Shaft Cont. Crank Retain.
24	C-6808	17		C-6808L2 1/4	1	KEY - Collar to Crank
25		18			1	SETSCREW -- 1/2-13 x 3 Lg.Sq.Hd. cup Pt.(Steel)
26	C-9372	19		X2559	1	LINK ASSEM. - Latch Shaft Control
27		20		C-9374	1	PIN - Latch Shaft Control Link to Crank
28		21		C-9464	1	NUT - Link to Crank Pin Retainer
29		21			1	COTTER PIN -- 1/8 x 1 3/4 Lg. -- (Steel)
30		22		C-9456	1	PIN - Link to Latch Shaft Control Lever
31		23		S-627	2	WASHER - Latch Shaft Control Lever Pin
32		24			2	COTTER PIN -- 3/16 x 1 3/4 Lg. -- (Steel)
33		25		W-1285	1	LEVER - Latch Shaft Control
34		26		C-9460	2	CAPSCREW - Latch Shaft Cont. Lever Clamp
35					1	WIRE -- #16 Ga. x 5 Lg. - - (Steel)
36		27			1	TAPER PIN -- No. 9 x 4 Lg. -- (Steel)
37						
38		28		W-1314	1	HANDWHEEL - Reversing Rack Hand Control
39		29			3	CAPSCREW -- 5/8-11-NC x 1 1/2 Lg. - (Steel)
40		29			3	LOCKWASHER -- 5/8 SAE Reg. -- (Steel)
41						
42						
43						
44						
45						
46						
47						
48						
49						
50						

FOR OPP. PART SEE 2L186

FOR OPP. ROT. SEE

NAME REVERSING RACK GROUP

ORIGINALLY ISSUED FOR 6 CYL. 14½x18 - 15x19 - R.H.

FOR TOTAL REQUIREMENTS PER ENGINE MULTIPLY NO. REQ'D GIVEN ABOVE BY NO. REQ'D FOR THIS GROUP GIVEN ON INDEX SHEET

PARTS LIST

ATLAS IMPERIAL DIESEL ENGINE CO.
OAKLAND, CALIF. MATTOON, ILL.

FORM NO. 240 10-39

2L185

EXTRA COPIES TO

TYPED BY MED DATE 4-7-41 ISSUED BY DATE CHKD. APRVD.

CHANGES #2 Retyped & Revised From Sheet Dated 1-9-41

CHANGES

ALWAYS GIVE PART NUMBER—PART NAME—ENGINE NUMBER
FOR STD. HARDWARE WITHOUT PART NUMBER GIVE DESCRIPTION AND SIZE
* INDICATES PART NOT SERVICED INDIVIDUALLY

PLATE NO. 2L418 SHEET 1 OF 2

LINE NO.	DRWG. NO.	REF. NO. *	PART NO.	NO. REQD.	PART NAME	ASSEM. DRWG. NO.
1					--- Air Start. Man. to Eng. Control Valve ---	
2				1	NIPPLE -- 3/4 x 1 1/2 Lg. - (Brass)	
3	C-9499		C-9499-P	1	REDUCER - Air Pressure	
4				1	REDUCING BUSHING -- 3/4 x 3/8 Std. - (Brass)	
5	C-9804		C-9804-P 1/2	1	ELBOW - Tube	
6				1	TUBE -- 1/2 O.D. x .049 x 46 Lg.-(H.D. Cop.)	
7	C-9804		C-9804-P 1/2	1	ELBOW - Tube	
8	C-9804		C-9804-P 1/2	1	ELBOW - Tube	
9				1	TUBE -- 1/2 O.D. x .049 x 12 Lg. - (H.D. Cop.)	
10	C-9804		C-9804-P 1/2	1	ELBOW - Tube	
11						
12				---	Air Man. Valve to Disc Valve(Valve Control Line)	
13	C-9801		C-9801-P 3/8	1	Connector - Tube	
14				1	TUBE -- 3/8 O.D. x .035 x 30 Lg.-(S.D. Cop.)	
15	C-9804		C-9804-P 3/8	1	ELBOW - Tube	
16	C-9804		C-9804-P 3/8	1	ELBOW - Tube	
17				1	TUBE -- 3/8 O.D. x .035 x 12 Lg.-(S.D. Cop.)	
18	C-9801		C-9801-P 3/8	1	CONNECTOR - Tube	
19						
20					--- Air Start. Valve (On Man.) Bleeder Line ---	
21	C-9804		C-9804-P 3/8	1	ELBOW - Tube	
22				1	TUBE -- 3/8 O.D. x .035 x 30 Lg. - (S.D. Cop.)	
23	C-9804		C-9804-P 3/8	1	ELBOW - Tube	
24						
25				---	Eng. Cont. Valve to Revers. Cyl. - (Ahead) ---	
26				1	NIPPLE -- 3/8 x 3 Lg. - (Brass)	
27	C-9805		C-9805-P 1/2	1	ELBOW - Tube	
28				1	TUBE -- 1/2 O.D. x .049 x 20 Lg.-(H.D. Cop.)	
29	C-9803		C-9803-P 1/2	1	UNION - Tube	
30				1	TUBE -- 1/2 O.D. x .049 x 26 Lg.- (H.D. Cop.)	
31	C-9801		C-9801-P 1/2	1	CONNECTOR - Tube	
32	C-9801		C-9801-P 1/2	1	CONNECTOR - Tube	
33				1	TUBE(To Cyl.)-1/2 ODx .049x 22 Lg.(H.D. Cop.)	
34	C-9804		C-9804-P 1/2	1	ELBOW - Tube	
35				1	REDUCING BUSHING -- 1/2 x 3/8 Std.-(Brass)	
36						
37				---	Eng. Cont. Valve to Revers. Cyl. -(Astern) ---	
38				1	NIPPLE -- 3/8 x 1 1/2 Lg. - (Brass)	
39	C-9805		C-9805-P 1/2	1	ELBOW - Tube	
40				1	TUBE -- 1/2 O.D. x .049 x 18 Lg.-(H.D. Cop.)	
41	C-9803		C-9803-P 1/2	1	UNION - Tube	
42				1	TUBE -- 1/2 O.D. x .049 x 26 Lg.-(H.D. Cop.)	
43	C-9801		C-9801-P 1/2	1	CONNECTOR - Tube	
44	C-9801		C-9801-P 1/2	1	CONNECTOR - Tube	
45				1	TUBE--1/2 ODx .049x 9 Lg.-(H.D. Cop.)	
46	C-9804		C-9804-P 1/2	1	ELBOW - Tube	
47				1	REDUCING BUSHING--1/2 x 3/8 Std.-(Brass)	
48						
49					---- CONTINUED ON SHEET NO. 2 ----	
50						

2L418 SHEET 1 OF 2

FOR OPP. HAND SEE

FOR OPP. ROT. SEE

NAME AIR PIPING GROUP

ORIGINALLY ISSUED FOR 6 CYL. 14 1/2 x 18 MARINE

FOR TOTAL REQUIREMENTS PER ENGINE MULTIPLY NO. REQ'D GIVEN ABOVE BY NO. REQ'D FOR THIS GROUP GIVEN ON INDEX SHEET

PARTS LIST

ATLAS IMPERIAL DIESEL ENGINE CO.
OAKLAND, CALIF. MATTOON, ILL.

FORM NO. 240 10-39

EXTRA COPIES TO

TYPED BY MED DATE 4-7-41 ISSUED BY DATE CHKD. APRVD.

CHANGES #1 Retyped & Revised From Sheet Dated 1-9-41

CHANGES

ALWAYS GIVE PART NUMBER—PART NAME—ENGINE NUMBER
FOR STD. HARDWARE WITHOUT PART NUMBER GIVE DESCRIPTION AND SIZE
* INDICATES PART NOT SERVICED INDIVIDUALLY

2L418 SHEET 2 OF 2
PLATE NO.

LINE NO.	DRWG. NO.	REF. NO.	*	PART NO.	NO. REQD.	PART NAME	ASSEM. DRWG. NO.
1						---- CONTINUED FROM SHEET NO. 1 ----	
2							
3				X2637	1	BRACKET ASSEM. - Rack Control Cyl. Air Tubes	
4					2	CAPSCREW -- 3/8-16-NC x 3/4 Lg. - (St.)	
5					2	LOCKWASHER -- 3/8 SAE Reg. - - (St.)	
6							
7						--- Eng. Cont. Valve to Air Brake Cyl. ---	
8	C-9801			C-9801-P 1/2	1	CONNECTOR - Tube	
9					1	TUBE -- 1/2 O.D. x .049 x 36 Lg.-(H.D. Cop.)	
10	C-9803			C-9803-P 1/2	1	UNION - Tube	
11					1	TUBE -- 1/2 O.D. x .049 x 22 Lg.-(H.D. Cop.)	
12	C-9804			C-9804-P 1/2	1	ELBOW - Tube	
13					1	CLOSE NIPPLE -- 3/8 Std. - (Brass)	
14					1	TEE -- 3/8 Std. - - (M.I.)	
15	C-9801			C-9801-P 1/2	1	CONNECTOR - Tube	
16					1	TUBE -- 1/2 O.D. x .049 x 27 Lg. - (H.D. Cop.)	
17	C-9801			C-9801-P 1/2	1	CONNECTOR - Tube	
18							
19						--- Air Brake Line Tee to Comp. Release Man. ---	
20	C-9801			C-9801-P 1/2	1	CONNECTOR - Tube	
21					1	TUBE -- 1/2 O.D. x .049 x 56 Lg.-(H.D. Cop.)	
22	C-9801			C-9801-P 1/2	1	CONNECTOR - Tube	
23	C-9048			C-9048-P 3/8	1	GLOBE VALVE	
24					1	CLOSE NIPPLE -- 3/8 Std. - (W.I.)	
25					1	ELBOW -- 3/8 x 1/4 Std. Reducing (M.I.)	
26	F-6447			X3224	1	MANIFOLD ASSEM. - Comp. Release Valve Air	
27					1	PIPE CAP -- 1/4 Std. - (M.I.)	
28				2C2093	3	CLAMP - Manifold to Air Start. Manifold	
29					3	CAPSCREW -- 3/8-16-NC x 1 Lg. - (St.)	
30					3	NUT -- 3/8-16-NC-Hex. - - (St.)	
31							
32						--- Comp. Release Man. to Valve ---	
33	C-9804			C-9804-P 1/4	6	ELBOW - Tube	
34					6	TUBE -- 1/4 O.D. x .030 x 18 Lg.-(S.D. Cop.)	
35	C-9801			C-9801-P 1/4	6	CONNECTOR - Tube	
36							
37							
38							
39							
40							
41							
42							
43							
44							
45							
46							
47							
48							
49							
50							

FOR OPP. HAND SEE

FOR OPP. ROT. SEE

NAME AIR PIPING GROUP

ORIGINALLY ISSUED FOR 6 CYL. 14 1/2 x 18 MARINE

FOR TOTAL REQUIREMENTS PER ENGINE MULTIPLY NO. REQ'D GIVEN ABOVE BY NO. REQ'D FOR THIS GROUP GIVEN ON INDEX SHEET

PARTS LIST

ATLAS IMPERIAL DIESEL ENGINE CO.
OAKLAND, CALIF. MATTOON, ILL.

FORM NO. 249 10-39

2L418 SHEET 2 OF 2

PLATE I
No. K-1592-(ED.-2)

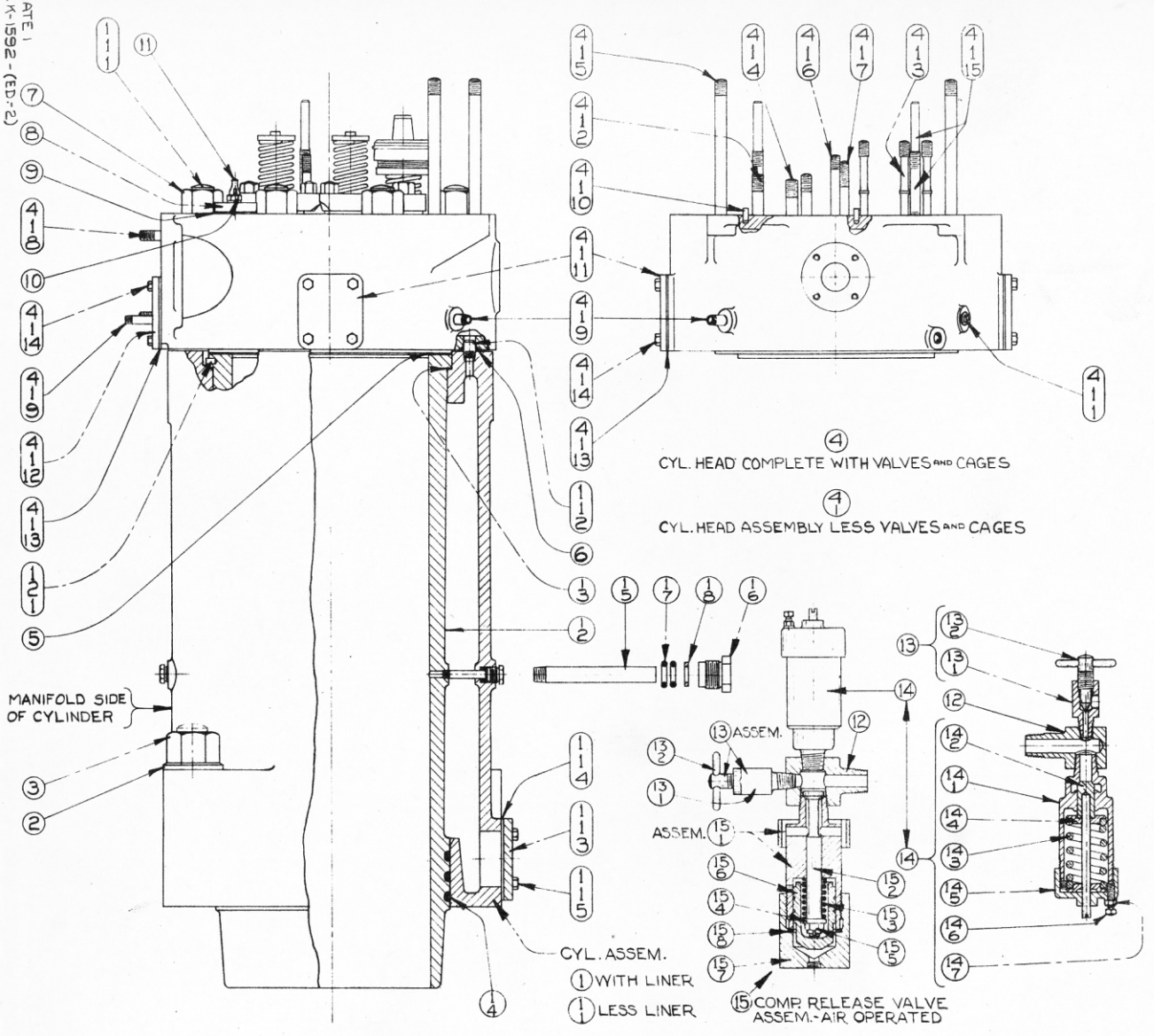

(4) CYL. HEAD COMPLETE WITH VALVES AND CAGES

(4/1) CYL. HEAD ASSEMBLY LESS VALVES AND CAGES

(15) COMP. RELEASE VALVE ASSEM.-AIR OPERATED

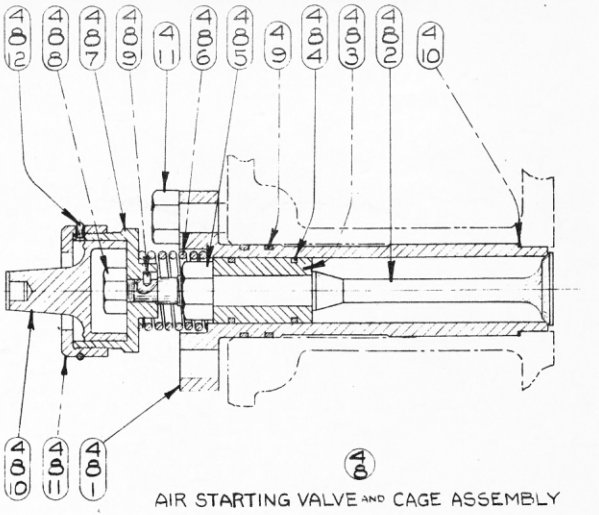

(4/8) AIR STARTING VALVE AND CAGE ASSEMBLY

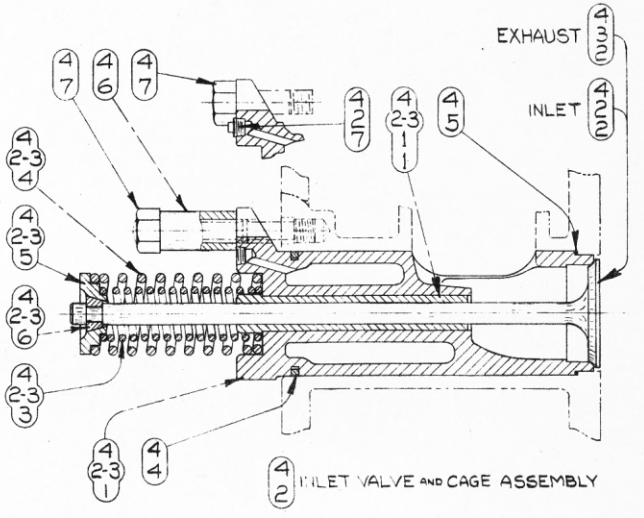

(4/2) INLET VALVE AND CAGE ASSEMBLY

(4/3) EXHAUST VALVE AND CAGE ASSEMBLY

EXTRA COPIES TO | TYPED BY MED DATE 1-7-41 | ISSUED BY | DATE | CHKD. | APRVD.

CHANGES: #1 7-2-42 Added Part No. 2C3153

CHANGES

ALWAYS GIVE PART NUMBER—PART NAME—ENGINE NUMBER
FOR STD. HARDWARE WITHOUT PART NUMBER GIVE DESCRIPTION AND SIZE
* INDICATES PART NOT SERVICED INDIVIDUALLY

2L460

PLATE NO. K-1592

LINE NO.	DRWG. NO.	REF. NO.	*	PART NO.	NO. REQD.	PART NAME	ASSEM. DRWG. NO.
1		1		X2653	1	CYLINDER ASSEMBLY	
2		1A		2C3153	1	GASKET - Cyl. to Centerframe	
3		2		C-48	4	WASHER - Cyl. to Centerframe Stud	
4		3			4	NUT -- 2 1/4-4 1/2-NC-Hex. - (St.)	
5		4		X3242	1	HEAD ASSEM. - Cylinder	
6		5		C-9602	1	GASKET - Head to Cylinder	
7	S-929	6		610A-03	8	GROMMET - Cyl. to Head Water By-Pass Pipe	
8		7			8	NUT -- 1 3/4-5-NC-Hex. - - (St.)	
9		8		C-6457	1	COVER - Cyl. Head Water Outlet Hole	
10		9		S-1042	1	GASKET - Cover to Cyl. Head	
11		10			2	CAPSCREW -- 1/2-13-NC x 1 1/4 Lg. - (St.)	
12		10			2	LOCKWASHER -- 1/2 SAE Reg. - - (St.)	
13	C-9045	11		C-9045-P 1/4	1	COCK - Tee Handle	
14							
15		12		2C2088	1	PLUG - Comp. Release & Safety Valve Adaptor	
16	C-354	13		G1197-E1	1	VALVE ASSEM. - Compression Release (Snifter)	
17	S-3340	14		X204	1	VALVE ASSEM. - Cyl. Press. Relief Safety	
18	W-1767	15		X3222	1	VALVE ASSEM. - Comp. Release (Air Operated)	
19							
20							
21							
22							
23							
24							
25							
26							
27							
28							
29							
30							
31							
32							
33							
34							
35							
36							
37							
38							
39							
40							
41							
42							
43							
44							
45							
46							
47							
48							
49							
50							

2L460

FOR OPP. HAND SEE

FOR OPP. ROT. SEE

NAME CYLINDER & HEAD GROUP

ORIGINALLY ISSUED FOR 15 x 19 MARINE

FOR TOTAL REQUIREMENTS PER ENGINE MULTIPLY NO. REQ'D GIVEN ABOVE BY NO. REQ'D FOR THIS GROUP GIVEN ON INDEX SHEET

PARTS LIST

ATLAS IMPERIAL DIESEL ENGINE CO.
OAKLAND, CALIF. MATTOON, ILL.

FORM NO. 240 10-39

PLATE
Nº K-1593 -(ED 2)

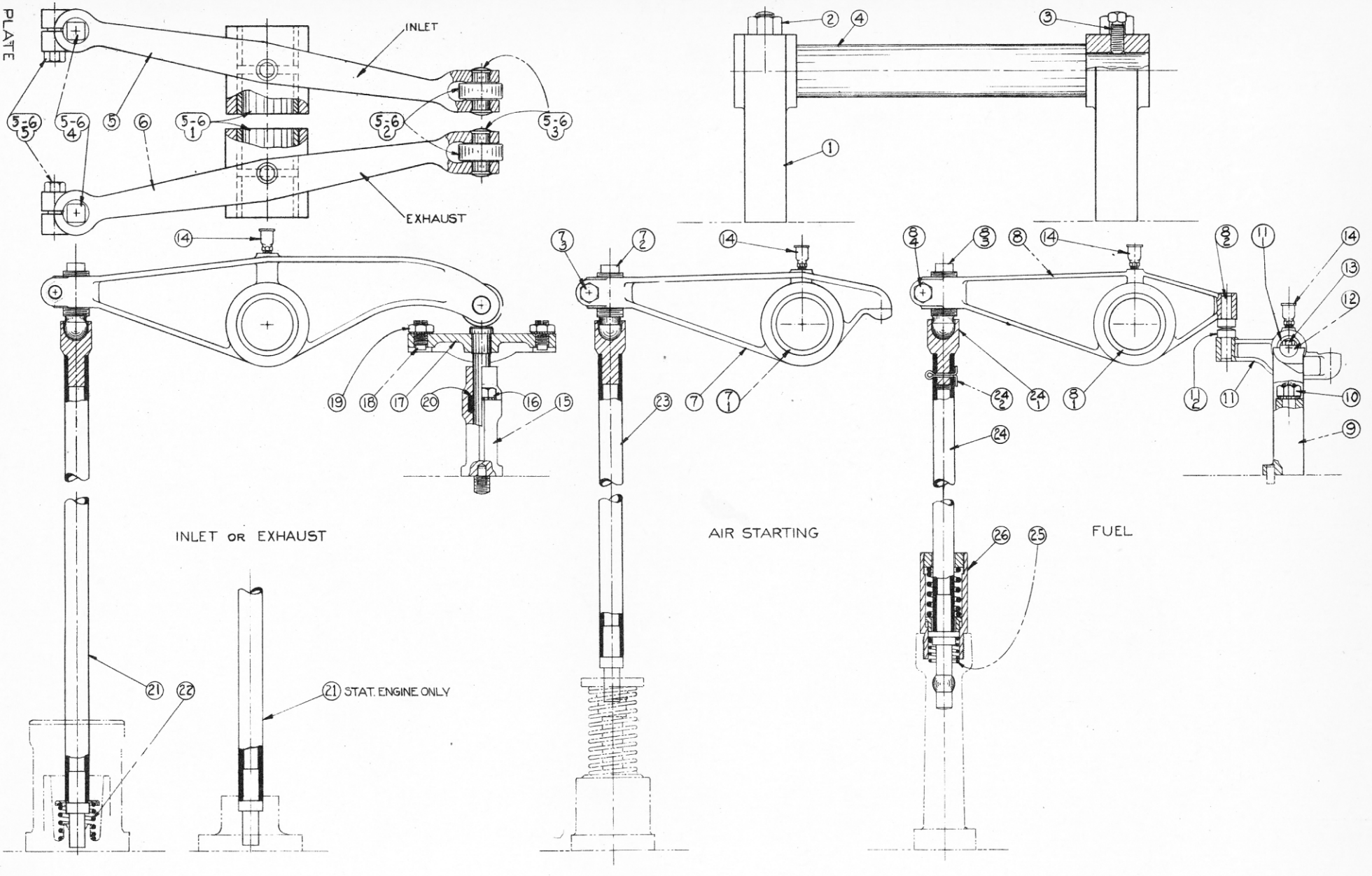

EXTRA COPIES TO

TYPED BY MED DATE 1-7-41 ISSUED BY DATE CHKD. APRVD.

CHANGES #1 1-7-42 Line 16 Was Lunkenheimer #540

CHANGES

ALWAYS GIVE PART NUMBER—PART NAME—ENGINE NUMBER
FOR STD. HARDWARE WITHOUT PART NUMBER GIVE DESCRIPTION AND SIZE
* INDICATES PART NOT SERVICED INDIVIDUALLY

2L461

PLATE NO. K-1593

LINE NO.	DRWG. NO.	REF. NO.	*	PART NO.	NO. REQD.	PART NAME	ASSEM. DRWG. NO.
1	(File)	1		566-GX8	2	BEARING - Valve Rocker Shaft	
2		2			4	NUT -- 7/8-9-NC-Hex. - - (St.)	
3		3			2	SETSCREW -- 5/8-11-NC x 1 1/4 Lg.- Sq. Hd. - Cup Pt.-(St.)	
4							
5	F-140	4		565-HX	1	SHAFT - Valve Rocker	
6		5		X878	1	ROCKER ASSEM. - Inlet Valve	
7		6		X877	1	ROCKER ASSEM. - Exhaust Valve	
8		7		X879	1	ROCKER ASSEM. - Air Starting Valve	
9		8		X2648	1	ROCKER ASSEM. - Fuel Spray Valve (Long)	
10		9		F-3209	1	STAND - Fuel Spray Valve Short Rocker	
11		10			1	NUT -- 5/8-11-NC-Hex. - - (St.)	
12		10			1	LOCKWASHER -- Shakeproof Type 11 - 5/8 -(St.)	
13		11		X382	1	ROCKER ASSEM. - Fuel Spray Valve (Short)	
14		12		C-1819	1	PIN - Spray Valve Short Rocker to Stand	
15		13			1	CAPSCREW -- 3/8-16-NC x 1 Lg. - (St.)	
16		14			5	OIL CUP --Bowen No. 5 - Hinged Lid -1/8 P.T.(St)	
17							
18		15		F-3212	2	GUIDE - Inlet & Exhaust Valve Yoke	
19		16			2	NUT -- 3/4-10-NC-Hex. - (St.)	
20					2	LOCKWASHER -- Type 11 Shakeproof - 3/4 - (St.)	
21	2C2096	17		X3219	1	YOKE ASSEM. - Inlet Valve	
22	2C2096	17		X3220	1	YOKE ASSEM. - Exhaust Valve	
23		18		C-1824	4	SCREW - Valve Yoke Adjusting	
24		19			4	HALF NUT -- 5/8-18-NF-Hex. - - (St.)	
25		19			4	LOCKWASHER -- Shakeproof 5/8 - Type 11 (St.)	
26		20		C-1838	2	WASHER - Valve Yoke Guide Felt	
27							
28	C-9322	21		X2541	2	PUSH-ROD ASSEM. - Inlet & Exhaust Valve	
29		22		C-9339	2	SPRING - Inlet & Exhaust Valve Push-Rod	
30	F-4972	23		X1728	1	PUSH-ROD ASSEM. - Air Starting Valve	
31	F-5801	24		X2540	1	PUSH-ROD ASSEM. - Fuel Spray Valve	
32		25		C-8234	1	SPRING - Fuel Spray Valve Push-Rod (Lower)	
33	C-8225	26		X2197	1	SPRING ASSEM. - Fuel Spray Valve Buffer	
34							
35							
36							
37							
38							
39							
40							
41							
42							
43							
44							
45							
46							
47							
48							
49							
50							

FOR OPP. HAND SEE

FOR OPP. ROT. SEE

NAME VALVE ROCKER & PUSH-ROD GROUP

ORIGINALLY ISSUED FOR 6 CYL. 14½x18--15x19 MARINE

FOR TOTAL REQUIREMENTS PER ENGINE MULTIPLY NO. REQ'D GIVEN ABOVE BY NO. REQ'D FOR THIS GROUP GIVEN ON INDEX SHEET

PARTS LIST

ATLAS IMPERIAL DIESEL ENGINE CO.
OAKLAND, CALIF. MATTOON, ILL.

FORM NO. 240 10-39

2L461

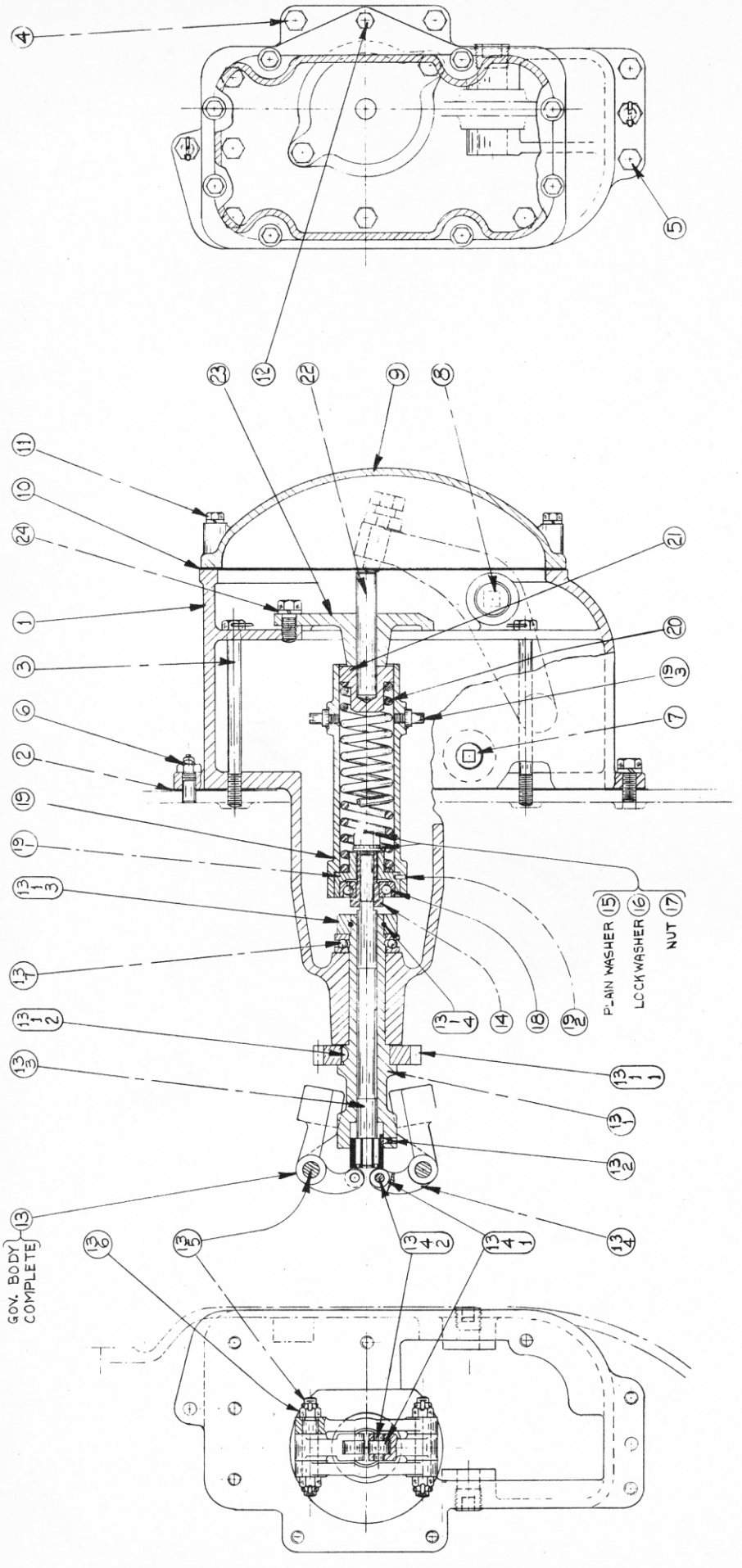

PLATE
No. K-1620-(ED. 2)

DO NOT ORDER PARTS BY REF. NUMBERS

EXTRA COPIES TO _____ TYPED BY MBD DATE 1-13-41 ISSUED _____ DATE _____ CHKD. _____ APRVD. _____

CHANGES

CHANGES

ALWAYS GIVE PART NUMBER—PART NAME—ENGINE NUMBER
FOR STD. HARDWARE WITHOUT PART NUMBER GIVE DESCRIPTION AND SIZE
* INDICATES PART NOT SERVICED INDIVIDUALLY

2L464

PLATE NO. K-1620

LINE NO.	DRWG. NO.	REF. NO.	*	PART NO.	NO. REQD.	PART NAME	ASSEM. DRWG. NO.
1		1		K-1425	1	HOUSING - Governor	
2		2		F-5823	1	GASKET - Gov. Hous. to Engine Control Housing	
3	C-2408	3		C-2408L6 3/4	5	CAPSCREW - Gov. Hous. to Engine Control Housing	
4					1	WIRE -- #16 Ga. x 20 Lg. - (St.)	
5	C-2408	4		C-2408L9 1/4	2	CAPSCREW - Gov. Hous. to Engine Control Housing	
6		5			2	CAPSCREW -- 1/2-13-NC x 1 1/4 Lg. - (St.)	
7					4	LOCKWASHER -- 1/2 SAE Reg. - - (St.)	
8	C-6633	6		C-6633L1 3/4	2	PIN - Gov. Hous. to Engine Control Hous. Dowel	
9		6			2	HALF NUT -- 1/2-13-NC-Hex. - - (St.)	
10		6			2	COTTER PIN -- 3/32 x 3/4 Lg. - (St.)	
11		7			2	PIPE PLUG -- 3/4 Std. - C't's'k. Hd.-(C.I.)	
12		8			1	PIPE PLUG -- 1 Std. - - C't's'k. Hd.-(C.I.)	
13		9		W-1281	1	COVER - Governor Housing (Fwd. End)	
14		10		C-9444	1	GASKET - Cover to Governor Housing	
15		11			8	CAPSCREW -- 3/8-16-NC x 2 1/2 Lg. - (St.)	
16		12			1	CAPSCREW -- 3/8-16-NC x 1 1/4 Lg. - (St.)	
17					9	LOCKWASHER -- 3/8 SAE Reg. - - (St.)	
18							
19							
20		13		X3250	1	BODY ASSEM. - Governor	
21		14		C-9578	1	SLEEVE - Thrust Quill Brg. Adaptor	
22		15			1	PLAIN WASHER -- 1/2 SAE Std. - - (St.)	
23		16			1	LOCKWASHER -- Shakeproof Type 11 - 1/2 - (St.)	
24		17			1	NUT -- 1/2-13-NC-Hex. - - (St.)	
25	C-9497	18		C-9497-P	1	BALL BEARING - Governor Spring Cage	
26	F-5864	19		X2638	1	CAGE ASSEM. - Governor Spring	
27		20		C-9594	1	SPRING - Governor	
28		21		C-9575	1	GUIDE - Governor Spring	
29		22		C-9429	1	PLUNGER - Governor Spring Control	
30		23		F-5863	1	GUIDE - Governor Spring Control Plunger	
31		24			2	CAPSCREW -- 1/2-13-NC x 1 1/4 Lg. - (St.)	
32		24			2	LOCKWASHER -- 1/2 SAE Reg. - - (St.)	
33							
34							
35							
36							
37							
38							
39							
40							
41							
42							
43							
44							
45							
46							
47							
48							
49							
50							

2L464

FOR OPP. HAND SEE 2L465

FOR OPP. ROT. SEE

NAME GOVERNOR & HOUSING GROUP - - (ENGINE R.P.M. - 300)

ORIGINALLY ISSUED FOR 6 CYL. 14½x18--15x19 MAR.-(RH)

FOR TOTAL REQUIREMENTS PER ENGINE MULTIPLY NO. REQ'D GIVEN ABOVE BY NO. REQ'D FOR THIS GROUP GIVEN ON INDEX SHEET

FORM NO. 240 10-39

PARTS LIST

ATLAS IMPERIAL DIESEL ENGINE CO.
OAKLAND, CALIF. MATTOON, ILL.

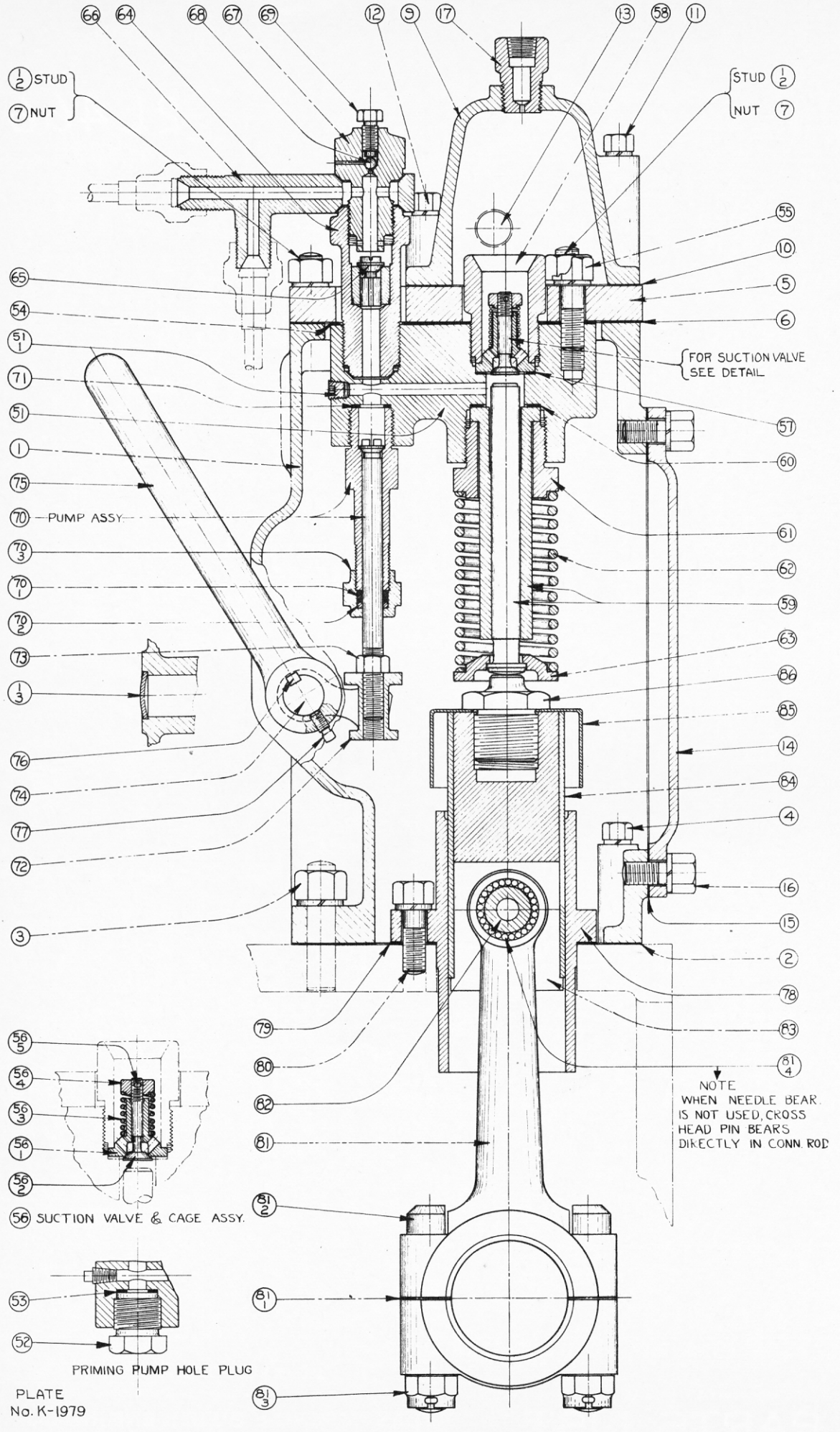
66 64 68 67 69 12 9 17 13 58 11
1/2 STUD
7 NUT
STUD 1/2
NUT 7
55
10
5
6
65
54
51 1
71
51
1
75
70 PUMP ASSY.
70 3
70 1
70 2
73
1/3
76
74
77
72
3
FOR SUCTION VALVE SEE DETAIL
57
60
61
62
59
63
66
85
14
84
4
16
15
2
78
83
81 4
NOTE
WHEN NEEDLE BEAR. IS NOT USED, CROSS HEAD PIN BEARS DIRECTLY IN CONN. ROD
79
80
82
81
81 2
81 1
81 3
56 5
56 4
56 3
56 1
56 2
56 SUCTION VALVE & CAGE ASSY.
53
52
PRIMING PUMP HOLE PLUG
PLATE
No. K-1979

EXTRA COPIES TO _____ TYPED BY MED DATE 1-13-[illegible] DATE _____ CHKD. _____ APRVD. _____

MASTER PARTS CHANGES

CHANGES

ALWAYS GIVE PART NUMBER—PART NAME—ENGINE NUMBER
FOR STD. HARDWARE WITHOUT PART NUMBER GIVE DESCRIPTION AND SIZE
* INDICATES PART NOT SERVICED INDIVIDUALLY

2L466

PLATE NO. K-1979

LINE NO.	DRWG. NO.	REF. NO.	*	PART NO.	NO. REQD.	PART NAME	ASSEM. DRWG. NO.
1		51		X3251	3	HEAD ASSEM. - H.P. Fuel Pump	
2		52		2C2160	2	PLUG - Pump Head (Priming Pump Hole)	
3		53		2C2119	2	GASKET - Plug to Head	
4		54		C-8109	3	GASKET - Head to Mounting Plate	
5		55			15	CAPSCREW -- 1/2-20-NF x 1 1/2 Lg.-(St.)	
6					15	LOCKWASHER -- 1/2 SAE Reg. - - (St.)	
7	C-8098	56		X2163	3	VALVE ASSEM. - Fuel Pump Suction	
8		57		C-8116	3	GASKET - Suction Valve to Pump Head	
9		58		C-8118	3	RETAINER - Fuel Pump Suction Valve	
10	C-8122	59		X2164	3	PUMP ASSEM. - H.P. Fuel	
11		60		C-8117	3	GASKET - Pump Body to Head	
12		61		C-8119	3	NUT - Pump Body to Head	
13		62		C-8124	3	SPRING - Fuel Pump Plunger	
14		63		C-8123	3	RETAINER - Pump Plunger Spring	
15	2C1225	64		X2789	3	CAGE ASSEM. - Fuel Pump Discharge Valve	
16		65		C-9225	3	VALVE - H.P. Fuel Pump Discharge	
17		66		2C1222	3	TEE - Fuel Pump Discharge	
18		67		2C1223	3	PLUG - Discharge Tee Retainer & Bleeder	
19		68			3	STEEL BALL -- 1/4 Dia. - Std. - (St.)	
20		69		C-6073	3	PLUG - Discharge Valve Bleeder	
21							
22							
23		70		X3227	1	PUMP ASSEM. - Fuel Priming	
24		71		2C2119	1	GASKET - Priming Pump to Head	
25	C-7546	72		1279-BXB3	1	COLLAR - Priming Pump Plunger	
26		73			1	NUT -- 7/16-20-NF-Hex. - - (St.)	
27		74		C-8088	1	SHAFT - Priming Pump Lever	
28		75		C-7464	1	LEVER - Priming Pump	
29	S-3137	76		5127	1	KEY - Lever to Shaft	
30		77			1	SETSCREW--1/4-20-NC x 1/2 Lg.-Sq.Hd.-Cup Pt.(St.	
31							
32		78		C-8084	3	GUIDE - H.P. Fuel Pump Crosshead	
33		79		C-8108	3	GASKET - Guide to Centerframe	
34		80			9	CAPSCREW -- 1/2-13-NC x 1 1/2 Lg. - (St.)	
35					9	LOCKWASHER -- 1/2 SAE Reg. - - (St.)	
36	F-5312	81		X2162	3	ROD ASSEM. - H.P. Fuel Pump Connect.	
37	S-553	82		828C-RB3	3	PIN - Fuel Pump Crosshead & Connect. Rod	
38	C-552	83		831-RB3	3	CROSSHEAD - H.P. Fuel Pump	
39	C-553	84		831C-RB3	3	SLEEVE - H.P. Fuel Pump Crosshead	
40	S-878	85		831D-RB31	3	GUARD - Crosshead Oil	
41		86		C-8126	3	PLUG - H.P. Fuel Pump Crosshead	
42							
43							
44							
45							
46							
47							
48							
49							
50							

2L466

FOR OPP. HAND SEE

FOR OPP. ROT. SEE

NAME HIGH PRESSURE FUEL PUMP GROUP

ORIGINALLY ISSUED FOR 6 CYL. 14½x18--15x19 MAR.-STAT.

FOR TOTAL REQUIREMENTS PER ENGINE MULTIPLY NO. REQ'D GIVEN ABOVE BY NO. REQ'D FOR THIS GROUP GIVEN ON INDEX SHEET

PARTS LIST

ATLAS IMPERIAL DIESEL ENGINE CO.
OAKLAND, CALIF. MATTOON, ILL.

FORM NO. 240 10-39

PLATE
No K-1610

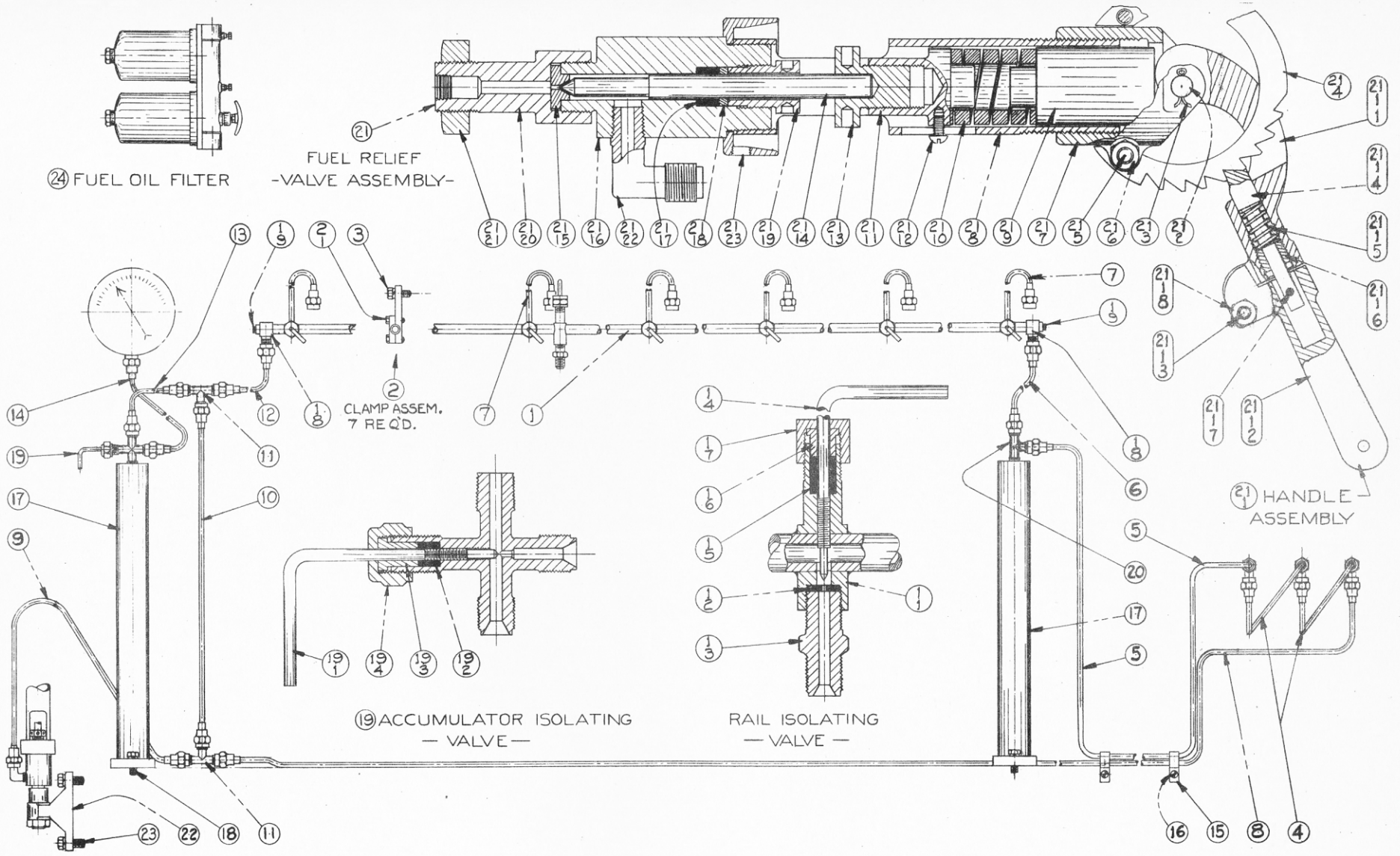

EXTRA COPIES TO

TYPED BY MED DATE 1-15-41 ISSUED BY DATE CHKD. APRVD.

CHANGES

CHANGES

ALWAYS GIVE PART NUMBER—PART NAME—ENGINE NUMBER
FOR STD. HARDWARE WITHOUT PART NUMBER GIVE DESCRIPTION AND SIZE
* INDICATES PART NOT SERVICED INDIVIDUALLY

2L468

PLATE NO. K-1610

ASSEM. DRWG. NO. C-9515

LINE NO.	DRWG. NO.	REF. NO.	*	PART NO.	NO. REQD.	PART NAME
1	F-6322	1		X3087	1	RAIL ASSEM. - H.P. Fuel
2	C-3210	2		X510	7	CLAMP ASSEM. - Fuel Rail
3		3			7	CAPSCREW -- 1/2-13-NC x 1 1/4 Lg. - (St.)
4		3			7	LOCKWASHER -- 1/2 SAE Reg. - - (St.)
5	C-3348	4		X575	2	TUBE ASSEM.-Pump to Pump - (13")
6	C-3348	5		X687	1	TUBE ASSEM.-Pump to Fwd. Fuel Receiver - (84")
7	C-3348	6		X5304	1	TUBE ASSEM.-Fwd. Receiver to Rail - (27")
8	C-3348	7		X682	6	TUBE ASSEM.-Fuel Rail to Spray Valve - (36")
9	C-3348	8		X2696	1	TUBE ASSEM.-Pump to Tee - (178")
10	C-3348	9		X2695	1	TUBE ASSEM.-Tee to Press. Relief Valve - (48")
11	C-3348	10		X2694	1	TUBE ASSEM.-Tee to Tee - - (9")
12		11		F-707	2	TEE - H.P. Fuel Line
13	C-3348	12		X682	1	TUBE ASSEM. - Tee to Fuel Rail - (36")
14	C-3348	13		X2259	1	TUBE ASSEM. - Tee to Aft. Fuel Receiver -(18")
15	C-3348	14		X573	1	TUBE ASSEM.-Aft. Receiver to Press. Gage (22")
16		15		C-9561	2	CLAMP - Tube (For Two 3/8 O.D. Tubes)
17		16		S-2810	3	CLAMP - Tube (For One 3/8 O.D. Tube)
18					5	MACHINE SCREW--1/4-20 x 3/8 Lg.-Rnd.Hd.-(St.)
19						
20	F-6457	17		X3234	2	ACCUMULATOR ASSEM. - H.P. Fuel
21		18			4	CAPSCREW -- 1/2-13-NC x 1 1/4 Lg. - (St.)
22		18			4	LOCKWASHER -- 1/2 SAE Reg. - - (St.)
23		19		G1215-E	1	VALVE ASSEM.-Accum. Isolating(Press. Gage Tube)
24		20		S-861	1	TEE - Accumulator (Fwd. End)
25						
26	W-28	21		G1230-E1	1	VALVE ASSEM. - Fuel Pressure Regulat.
27		22		F-5355	1	BRACKET - Fuel Pressure Regulat. Valve
28		23			2	CAPSCREW -- 5/8-11-NC x 1 1/2 Lg. - (St.)
29		23			2	LOCKWASHER -- 5/8 SAE Reg. - - (St.)
30						
31						
32						--- L.P. Fuel Piping - Pump to Filter ---
33					1	TUBE -- 1/2 O.D. x .049 x 38 Lg.-(H.D. Cop.)
34	C-9804			C-9804-P 1/2	2	ELBOW - Tube
35				S-2809	2	CLAMP - 1/2 O.D. Tube
36					2	MACHINE SCREW--1/4-20 x 1/2 Lg.-Rnd.Hd.-(St.)
37		24		F-6418-P	1	FILTER - Fuel Oil
38					2	REDUCING BUSHING -- 1/2 x 3/8 Std.-(C.I.)
39					2	CAPSCREW -- 1/2-13-NC x 1 1/4 Lg. - (St.)
40					2	LOCKWASHER -- 1/2 SAE Reg. - - (St.)
41						
42						
43						
44						
45						
46						
47						
48						
49						
50						

FOR OPP. HAND SEE 2L469

FOR OPP. ROT. SEE

NAME FUEL SYSTEM GROUP

ORIGINALLY ISSUED FOR 6 CYL. 14½x18--15x19 MAR.-R.H.

FOR TOTAL REQUIREMENTS PER ENGINE MULTIPLY NO. REQ'D GIVEN ABOVE BY NO. REQ'D FOR THIS GROUP GIVEN ON INDEX SHEET

PARTS LIST

ATLAS IMPERIAL DIESEL ENGINE CO.
OAKLAND, CALIF. MATTOON, ILL.

FORM NO. 240 10-39

2L468

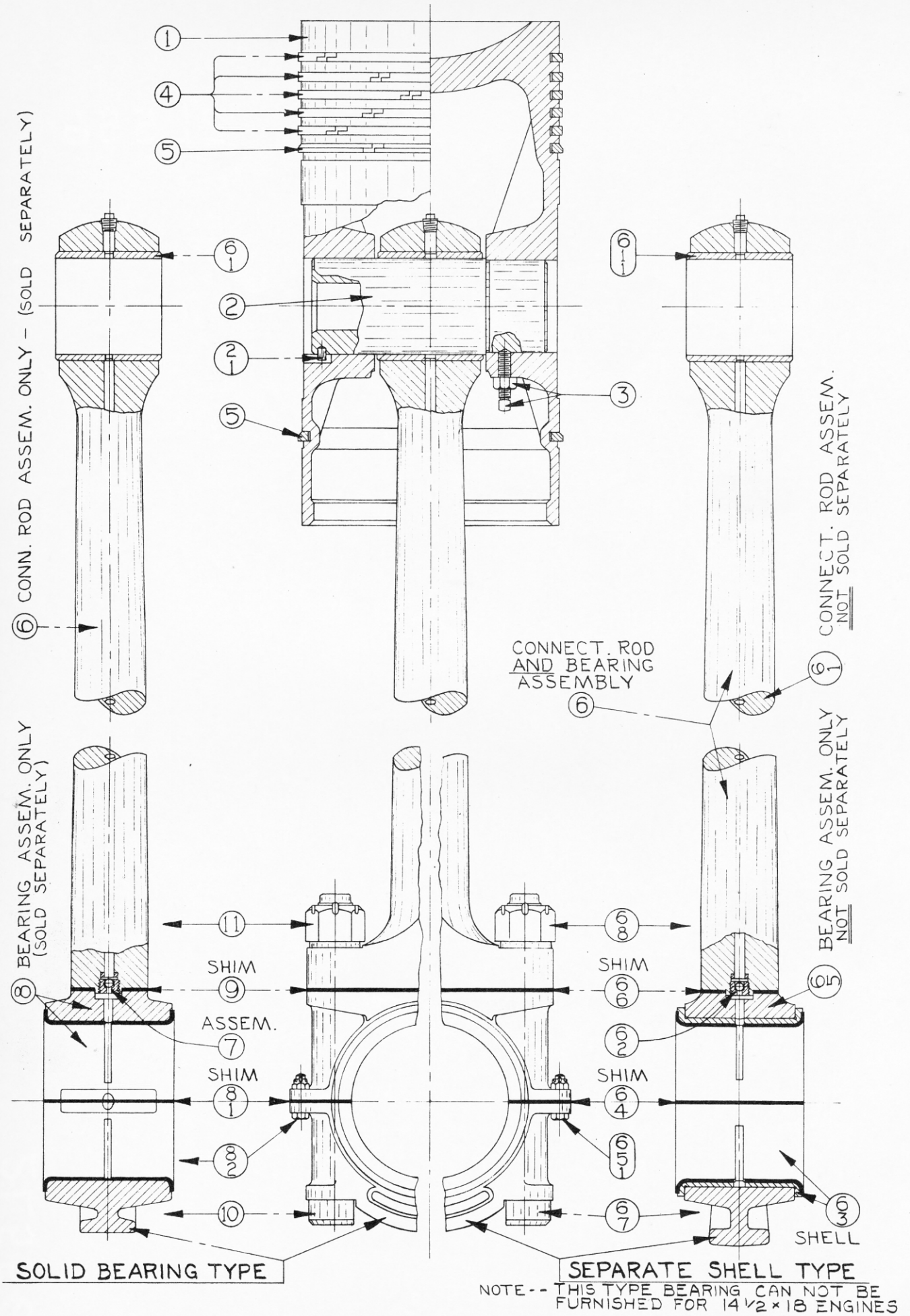

NOTE -- THIS TYPE BEARING CAN NOT BE FURNISHED FOR 14 1/2 × 18 ENGINES

EXTRA COPIES TO

TYPED BY MED DATE 4-2-41 ISSUED BY DATE CHKD. APRVD.

CHANGES

CHANGES

ALWAYS GIVE PART NUMBER—PART NAME—ENGINE NUMBER
FOR STD. HARDWARE WITHOUT PART NUMBER GIVE DESCRIPTION AND SIZE
* INDICATES PART NOT SERVICED INDIVIDUALLY

2L556

PLATE NO. W-1360 (ED 2)

LINE NO.	DRWG. NO.	REF. NO.	*	PART NO.	NO. REQD.	PART NAME	ASSEM. DRWG. NO.
1		1		K-1451	1	PISTON	
2	C-9604	2		X2646	1	PIN ASSEM. - Piston	
3		3			1	SETSCREW--3/4-10-NC x 3 Lg.-Sq.Hd.-Cup Pt.(St.)	
4		3			1	NUT -- 3/4-10-NC-Hex. - - (St.)	
5							
6	C-2157	4		C-2157L15	5	RING - Piston	
7	C-2357	5		C-2357L15	2	RING - Piston	
8							
9	W-1840	6		X3293	1	ROD & BEARING ASSEM. - Connecting	
10							
11							
12							
13							
14							
15							
16							
17							
18							
19							
20							
21							
22							
23							
24							
25							
26							
27							
28							
29							
30							
31							
32							
33							
34							
35							
36							
37							
38							
39							
40							
41							
42							
43							
44							
45							
46							
47							
48							
49							
50							

FOR OPP. HAND SEE

FOR OPP. ROT. SEE

FORM NO. 240 10-39

NAME PISTON & CONNECTING ROD GROUP

ORIGINALLY ISSUED FOR 6 CYL. 15 x 19 MAR. - STAT.

FOR TOTAL REQUIREMENTS PER ENGINE MULTIPLY NO. REQ'D GIVEN ABOVE BY NO. REQ'D FOR THIS GROUP GIVEN ON INDEX SHEET

PARTS LIST

ATLAS IMPERIAL DIESEL ENGINE CO.
OAKLAND, CALIF. MATTOON, ILL.

2L556

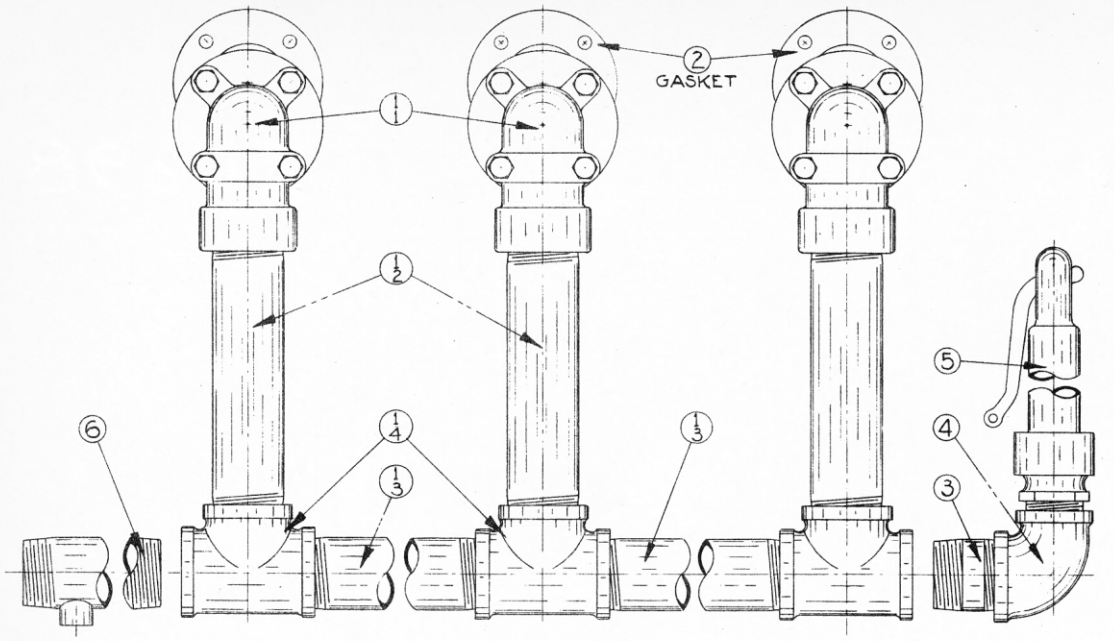

(1) MANIFOLD ASSEM. - LESS SAFETY VALVE & NIPPLE

MARINE AND STATIONARY

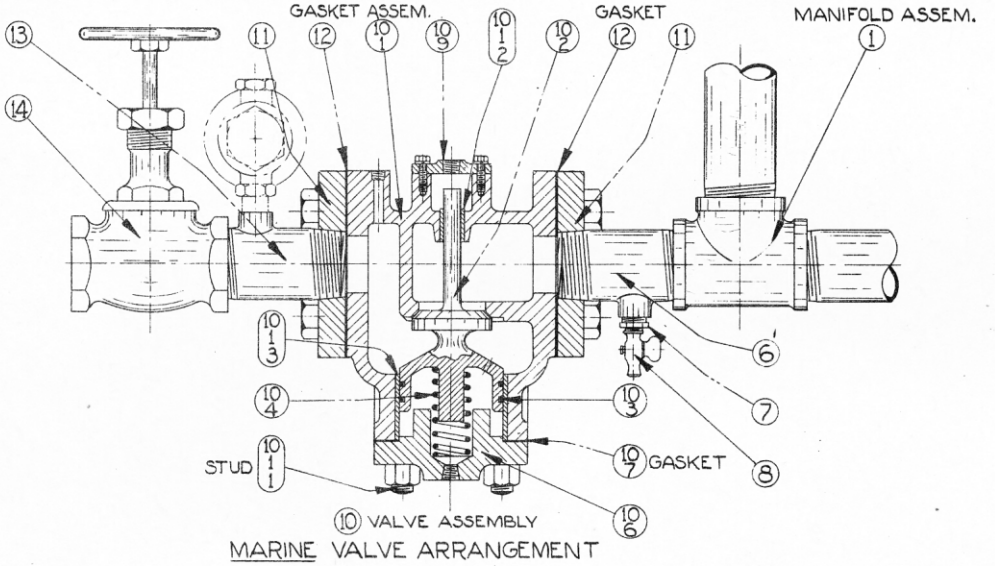

MARINE VALVE ARRANGEMENT

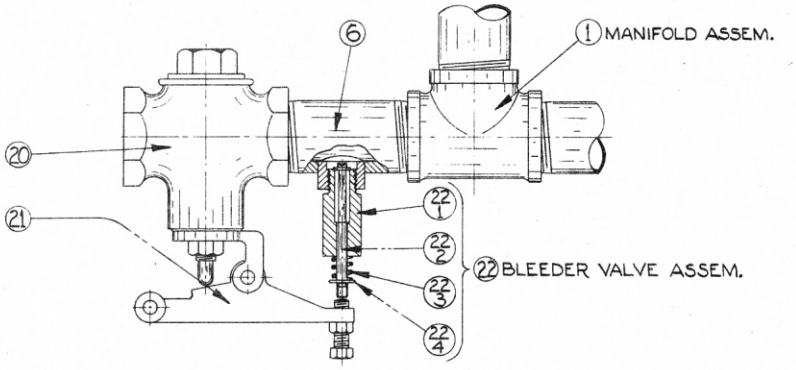

STATIONARY VALVE ARRANGEMENT

PLATE No.
K-2045

DO NOT ORDER PARTS BY REF. NUMBERS

EXTRA COPIES TO

TYPED BY MED DATE 10-7-41 ISSUED BY DATE CHKD. APRVD.

CHANGES

CHANGES

ALWAYS GIVE PART NUMBER—PART NAME—ENGINE NUMBER
FOR STD. HARDWARE WITHOUT PART NUMBER GIVE DESCRIPTION AND SIZE
* INDICATES PART NOT SERVICED INDIVIDUALLY

2L698

PLATE NO. K-2045

LINE NO.	DRWG. NO.	REF. NO.	*	PART NO.	NO. REQD.	PART NAME	ASSEM. DRWG. NO.
1		1		X3357	1	MANIFOLD ASSEM. - Air Starting	
2		2		C-7597	6	GASKET - Manifold to Cyl. Head	
3					12	CAPSCREW -- 1/2-13-NC x 1 1/2 Lg. - (St.)	
4					12	CAPSCREW -- 1/2-13-NC x 3 3/4 Lg. - (St.)	
5		3			1	CLOSE NIPPLE -- 2 Std. - - (W.I.)	
6		4			1	ELBOW -- 2 x 1 1/2 Std. Reducing - (M.I.)	
7	C-9800	5		C-9800-P1 1/2	1	SAFETY VALVE	
8	F-5363	6		X2191	1	NIPPLE ASSEM. - Man. to Start. Valve	
9		7			1	REDUCING BUSHING -- 1/2 x 1/4 Std. - (C.I.)	
10	C-9045	8		C-9045-P 1/4	1	COCK - Tee Handle Air	
11							
12		10		X3358	1	VALVE ASSEM. - Air Start. Manifold Air	
13		11		2C2627	2	FLANGE - Start. Valve	
14		12		2C2634	2	GASKET - Flange to Valve	
15					8	CAPSCREW -- 3/4-10-NC x 2 Lg. - (St.)	
16	F-5858	13		X2617	1	NIPPLE ASSEM.-Air Start. Valve to Globe Valve	
17	C-9046	14		C-9046-P2	1	GLOBE VALVE	
18							
19							
20							
21							
22							
23							
24							
25							
26							
27							
28							
29							
30							
31							
32							
33							
34							
35							
36							
37							
38							
39							
40							
41							
42							
43							
44							
45							
46							
47							
48							
49							
50							

FOR OPP. HAND SEE

FOR OPP. ROT. SEE

NAME AIR STARTING MANIFOLD GROUP

ORIGINALLY ISSUED FOR 6 CYL. 15 x 19 MARINE

FOR TOTAL REQUIREMENTS PER ENGINE MULTIPLY NO. REQ'D GIVEN ABOVE BY NO. REQ'D FOR THIS GROUP GIVEN ON INDEX SHEET

PARTS LIST

ATLAS IMPERIAL DIESEL ENGINE CO.
OAKLAND, CALIF. MATTOON, ILL.

FORM NO. 240 10-39

2L698

PLATE
No. K-2038

DO NOT ORDER PARTS BY REF No.

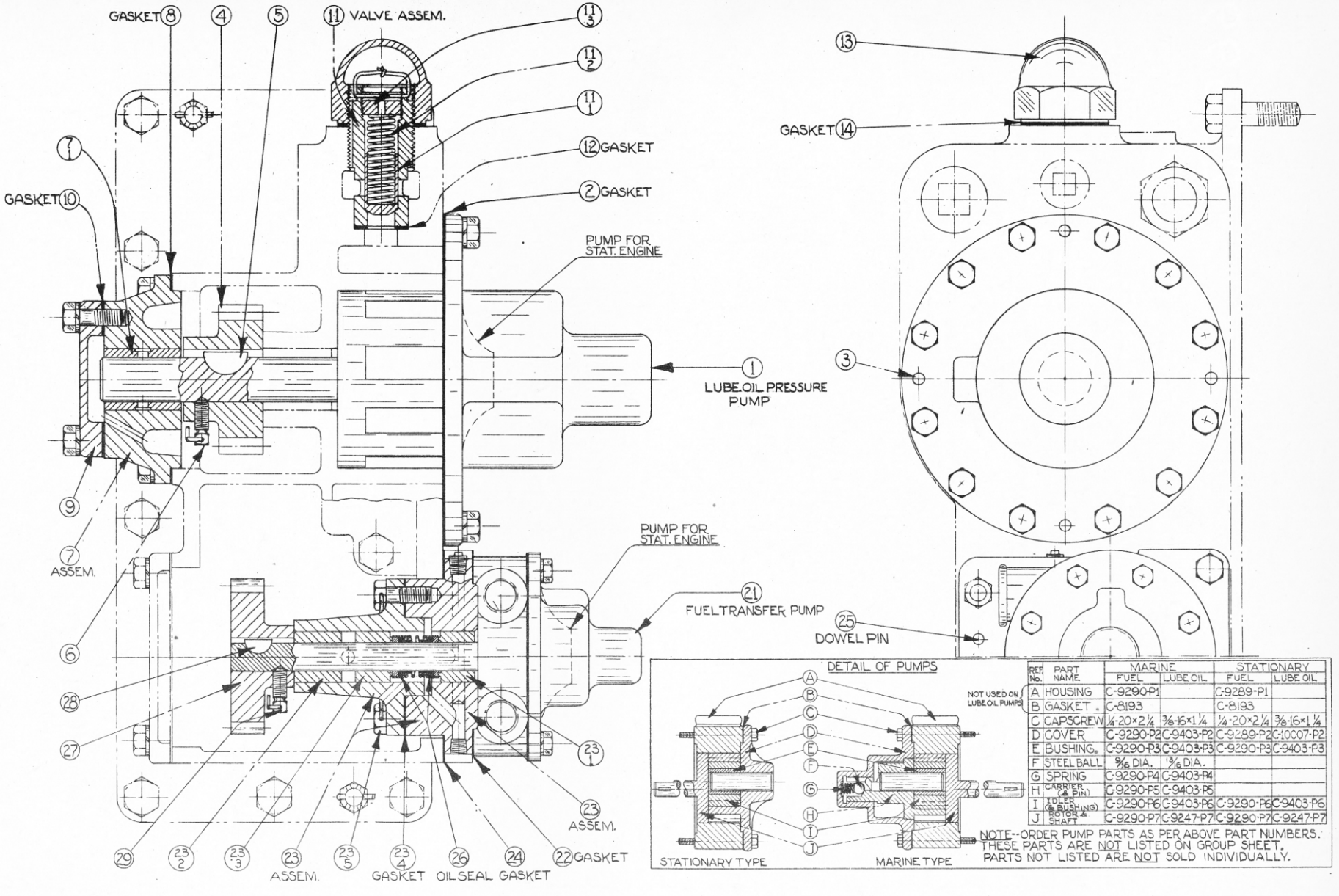

DETAIL OF PUMPS

REF No.	PART NAME.	MARINE FUEL	MARINE LUBE OIL	STATIONARY FUEL	STATIONARY LUBE OIL
A	HOUSING	C-9290-P1		C-9289-P1	
B	GASKET	C-8193		C-8193	
C	CAPSCREW	1/4-20×2 1/4	3/8-16×1 1/4	1/4-20×2 1/4	3/8-16×1 1/4
D	COVER	C-9290-P2	C-9403-P2	C-9289-P2	C-10007-P2
E	BUSHING	C-9290-P3	C-9403-P3	C-9290-P3	C-9403-P3
F	STEEL BALL	9/16 DIA.	13/16 DIA.		
G	SPRING	C-9290-P4	C-9403-P4		
H	CARRIER (& PIN)	C-9290-P5	C-9403-P5		
I	IDLER (& BUSHING)	C-9290-P6	C-9403-P6	C-9290-P6	C-9403-P6
J	ROTOR & SHAFT	C-9290-P7	C-9247-P7	C-9290-P7	C-9247-P7

NOTE--ORDER PUMP PARTS AS PER ABOVE PART NUMBERS. THESE PARTS ARE NOT LISTED ON GROUP SHEET. PARTS NOT LISTED ARE NOT SOLD INDIVIDUALLY.

EXTRA COPIES TO

TYPED BY MED DATE 10-7-41 ISSUED BY [illegible] DATE 10-7-41 CHKD. [illegible] APRVD.

CHANGES

CHANGES

ALWAYS GIVE PART NUMBER—PART NAME—ENGINE NUMBER
FOR STD. HARDWARE WITHOUT PART NUMBER GIVE DESCRIPTION AND SIZE
* INDICATES PART NOT SERVICED INDIVIDUALLY

2L699

PLATE NO. K-2038

LINE NO.	DRWG. NO.	REF. NO.	*	PART NO.	NO. REQD.	PART NAME	ASSEM. DRWG. NO.
1		1		C-9247	1	PUMP - Lube Oil Pressure	
2	C-9288	2		C-9288-P	3	GASKET - Pump to Drive Housing	
3					12	CAPSCREW -- 3/8-16-NC x 1 1/4 Lg. - (St.)	
4					12	LOCKWASHER -- 3/8 SAE Reg. - - (St.)	
5		3		S-1977	4	PIN - Pump to Drive Housing Dowel	
6		4		C-8153	1	GEAR - Lube Oil Pressure Pump Drive	
7		5			1	WOODRUFF KEY -- 1/4 x 1 Std. - (St.)	
8		6		C-8217	1	SETSCREW - Gear to Shaft	
9					1	WIRE(Setscrew Lock)--#16 Ga. x 8 Lg.-(St.)	
10		7		X2183	1	BEARING ASSEM.- Lube Oil Pressure Pump End	
11		8		C-8171	1	GASKET - Pump End Brg. to Drive Housing	
12					1	PIPE PLUG -- 1/8 Std. - - (C.I.)	
13					4	CAPSCREW -- 3/8-16-NC x 7/8 Lg. - - (St.)	
14					4	LOCKWASHER -- 3/8 SAE Reg. - - (St.)	
15		9		C-8150	1	COVER - Lube Oil Press. Pump End Brg.	
16		10		C-8176	1	GASKET - Cover to Brg.	
17					3	CAPSCREW -- 3/8-16-NC x 1 Lg. - (St.)	
18					3	LOCKWASHER -- 3/8 SAE Reg. - - (St.)	
19	C-6179	11		X1445	1	VALVE ASSEM. - Lube Oil Pressure Relief	
20	C-9176	12		C-9176-P	1	GASKET - Valve to Housing	
21		13		C-6180	1	CAP - Lube Oil Pressure Relief Valve	
22	C-1708	14		918D-E3	1	GASKET - Cap to Housing	
23							
24							
25	C-9290	21		C-9290-P	1	PUMP - Fuel Transfer	
26		22		C-8193	3	GASKET - Pump to Adaptor	
27					8	CAPSCREW -- 1/4-20-NC x 2 1/4 Lg. - (St.)	
28					8	LOCKWASHER -- 1/4 SAE Reg. - - (St.)	
29	2C2533	23		X3360	1	ADAPTOR ASSEM. - Transfer Pump	
30		24		C-8204	1	GASKET - Adaptor to Drive Housing	
31					2	CAPSCREW -- 3/8-16-NC x 1 1/4 Lg. - (St.)	
32					2	CAPSCREW -- 3/8-16-NC x 1 Lg. - (St.)	
33					4	LOCKWASHER -- 3/8 SAE Reg. - - (St.)	
34		25		S-1977	2	PIN - Adaptor to Drive Housing Dowel	
35	2C2478	26		2C2478-P	1	OIL SEAL	
36		27		C-8154	1	GEAR - Transfer Pump Drive	
37		28			1	WOODRUFF KEY -- 1/8 x 3/4 Std. - (St.)	
38		29		C-8217	1	SETSCREW - Gear to Shaft	
39					1	WIRE(Setscrew Lock)--#16 Ga. x 8 Lg.-(St.)	
40					2	PIPE PLUG -- 1/8 Std. - C't's'k. Hd.-(C.I.)	
41							
42							
43							
44							
45							
46							
47							
48							
49							
50							

2L699

FOR OPP. HAND SEE

FOR OPP. ROT. SEE

NAME LUBE OIL PRESSURE & FUEL TRANSFER PUMP GROUP

ORIGINALLY ISSUED FOR 6 CYL. 15 x 19 MARINE

FOR TOTAL REQUIREMENTS PER ENGINE MULTIPLY NO. REQ'D GIVEN ABOVE BY NO. REQ'D FOR THIS GROUP GIVEN ON INDEX SHEET

PARTS LIST

ATLAS IMPERIAL DIESEL ENGINE CO.
OAKLAND, CALIF. MATTOON, ILL.

FORM NO. 240 10-39

PLATE No. K-2092

DO NOT ORDER PARTS BY REF. NUMBERS

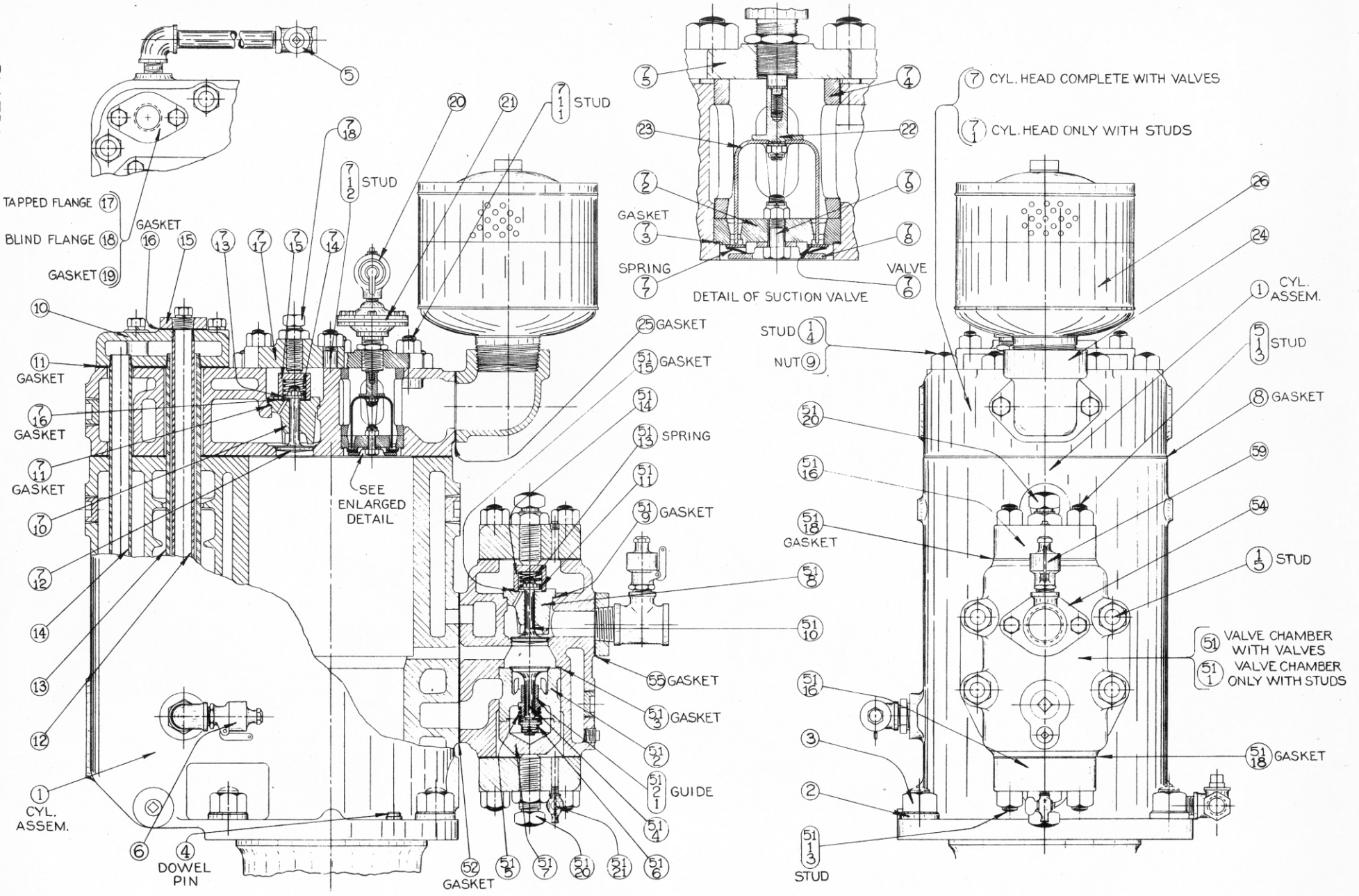

EXTRA COPIES TO

TYPED BY MED DATE 10-22-41 ISSUED BY BR DATE 10-24-41 CHKD BR APRVD. F.

CHANGES #1 4-3-42 Line 34 Part No. Was C-9319

CHANGES

ALWAYS GIVE PART NUMBER—PART NAME—ENGINE NUMBER
FOR STD. HARDWARE WITHOUT PART NUMBER GIVE DESCRIPTION AND SIZE
* INDICATES PART NOT SERVICED INDIVIDUALLY

2L730

PLATE NO. K-2092

LINE NO.	DRWG. NO.	REF. NO.	*	PART NO.	NO. REQD.	PART NAME	ASSEM. DRWG. NO.
1		1		X2532	1	CYLINDER ASSEM.- Air Compressor	
2		2		S-2708	4	WASHER - Cyl. to Centerframe Stud	
3		3			4	NUT -- 1-8-NC-Hex. - - (St.)	
4	C-6699	4		C-6699L2	2	PIN - Cylinder to Centerframe Dowel	
5					1	NIPPLE -- 1/2 x 3 1/2 Lg. - (Brass)	
6					1	ELBOW -- 1/2 Std. - - (Brass)	
7					1	PIPE -- 1/2 x 13 1/2 Lg.(Thr'd. Both Ends)(Brass.	
8	C-9053	5		C-9053-P 1/2	1	COCK - Air Compartment Drain	
9					1	NIPPLE(#1 Stage Safety Valve)--1/2 x 1 1/2 Lg.	
10						(Brass)	
11					1	ELBOW -- 1/2 Std. - - (Brass)	
12	C-9973	6		C-9973-P 1/2	1	VALVE - First Stage Safety (Set for 100 Lb.)	
13							
14		7		X3382	1	HEAD ASSEM. - Air Comp. Cylinder	
15		8		F-5761	1	GASKET - Head to Cylinder	
16		9			10	NUT -- 3/4-10-NC-Hex. - - (St.)	
17		10		F-5743	1	BY-PASS - Air Cooler & Cyl. Inlet Pipe Water	
18		11		C-9259	1	GASKET - By-Pass to Cyl. Head	
19					4	CAPSCREW -- 1/2-13-NC x 2 1/2 Lg. - (St.)	
20					4	LOCKWASHER -- 1/2 SAE Reg. - - (St.)	
21		12		C-9349	1	PIPE - Air Cooler (Inner)	
22	C-9351	13		X2535	1	PIPE ASSEM. - Air Cooler Outer	
23		14		C-9348	1	PIPE - Water By-Pass to Cylinder	
24		15		C-9346	1	FLANGE - Water By-Pass Inlet	
25		16		S-994	1	GASKET - Flange to By-Pass	
26					2	CAPSCREW -- 1/2-13-NC x 1 1/4 Lg. - (St.)	
27					2	LOCKWASHER -- 1/2 SAE Reg. - - (St.)	
28		17		C-9352	1	FLANGE - Cyl. Head Water Outlet Pipe	
29	C-488	18		785	1	FLANGE - Cyl. Head Water Outlet Pipe (Blind)	
30		19		S-2334	2	GASKET - Flange to Cylinder Head	
31					4	CAPSCREW -- 1/2-13-NC x 1 1/4 Lg. - (St.)	
32					4	LOCKWASHER -- 1/2 SAE Reg. - - (St.)	
33	C-9159	20		C-9159-P	1	PILOT - Suction Valve Unloader	
34		21		C-9158-P	1	DIAPHRAGM - Suction Valve Unloader	
35		22		2C2648	1	STUD - Unloader Diaphragm Extension	
36					1	LOCKWASHER -- 1/4 Shakeproof - Type 12 -(St.)	
37		23		S-1397	1	PRONG - Suction Valve Unloader	
38					1	CASTLE NUT -- 1/4-28-NF-Hex. - - (St.)	
39					1	PLAIN WASHER -- 1/4 SAE Std. - (St.)	
40					1	COTTER PIN -- 1/16 x 5/8 Lg. - (St.)	
41		24		W-1345	1	ELBOW - Air Cleaner Adaptor	
42		25		C-9264	1	GASKET - Elbow to Cylinder Head	
43					2	CAPSCREW -- 1/2-13-NC x 1 1/4 Lg. - (St.)	
44					2	LOCKWASHER -- 1/2 SAE Reg. - - (St.)	
45	C-9686	26		C-9686-P	1	AIR CLEANER	
46							
47							
48							
49							
50							

2L730

FOR OPP. HAND SEE

FOR OPP. ROT. SEE

NAME AIR COMPRESSOR CYLINDER & HEAD GROUP - (2 STAGE COMP.)
(48 CU. FT. AT 300 R.P.M.) ORIGINALLY ISSUED FOR 6 CYL. 14½x18 -- 15x19 MARINE

FOR TOTAL REQUIREMENTS PER ENGINE MULTIPLY NO. REQ'D GIVEN ABOVE BY NO. REQ'D FOR THIS GROUP GIVEN ON INDEX SHEET

PARTS LIST

ATLAS IMPERIAL DIESEL ENGINE CO.
OAKLAND, CALIF. MATTOON, ILL.

FORM NO. 240 10-39

PLATE
No. K-1595

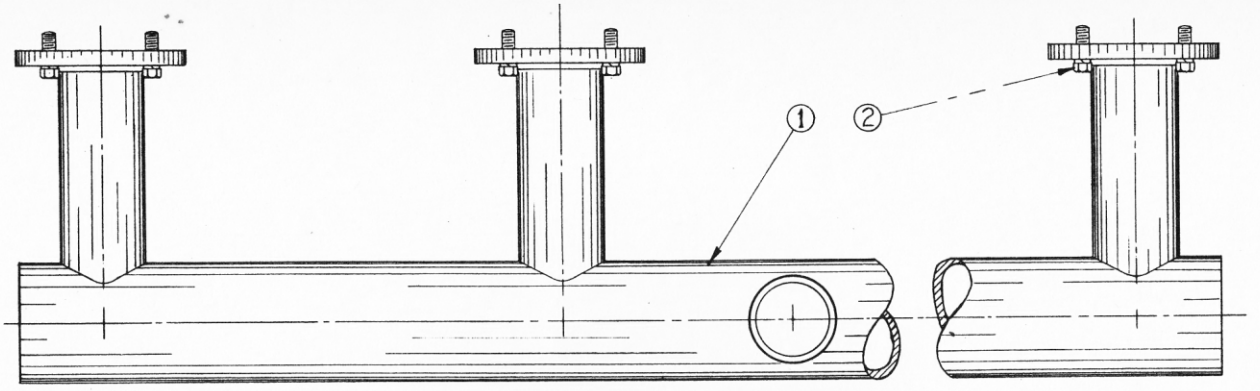

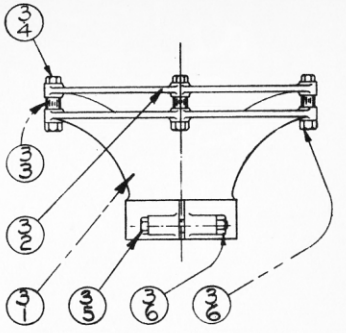

— ③ AIR SILENCER ASSEMBLY —

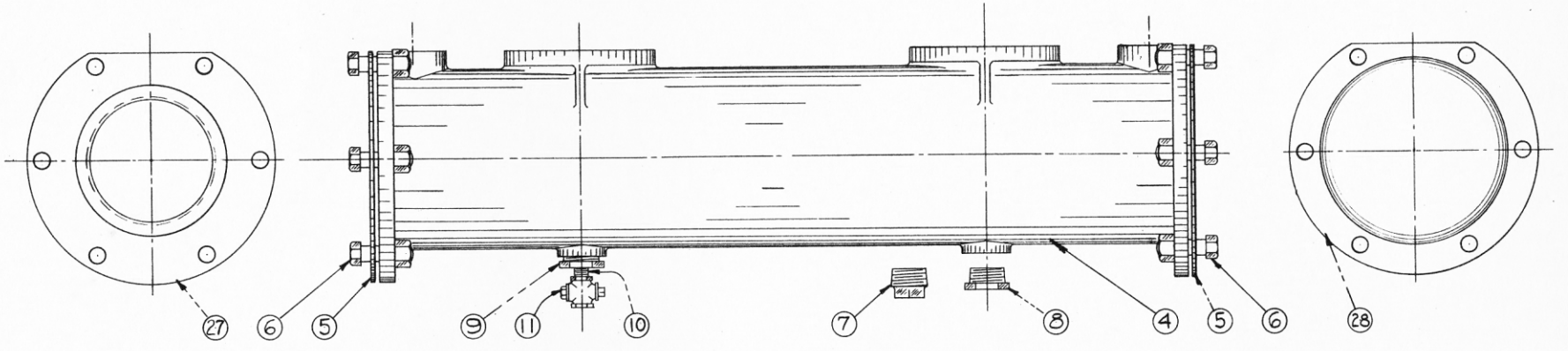

— EXHAUST MANIFOLD SECTION – 3 REQUIRED —

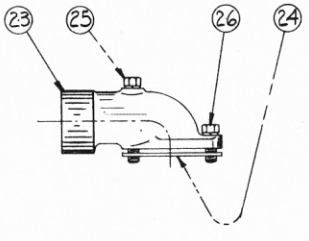

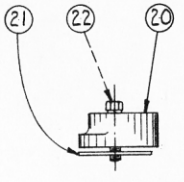

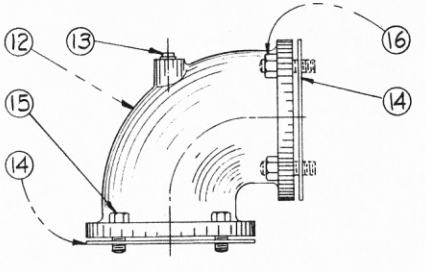

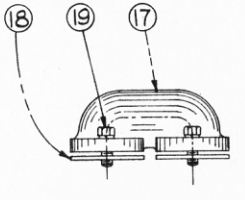

EXTRA COPIES TO

TYPED BY MED DATE 10-23-41 ISSUED BY JAR DATE 10-24-41 CHKD. HBR APRVD.

CHANGES

#1 10-27-41 Line 30 Part No. Was F-5814 Added Two Pipe Plugs One 1/2" Std. & One 3/4" Std.

#2 5-29-42 Line 19 No. Req'd. was 24 - Removed Line 21

CHANGES

ALWAYS GIVE PART NUMBER—PART NAME—ENGINE NUMBER
FOR STD. HARDWARE WITHOUT PART NUMBER GIVE DESCRIPTION AND SIZE
* INDICATES PART NOT SERVICED INDIVIDUALLY

2L732

PLATE NO. K-1595

LINE NO.	DRWG. NO.	REF. NO.	*	PART NO.	NO. REQD.	PART NAME	ASSEM. DRWG. NO.
1	W-1946	1		X3385	1	MANIFOLD ASSEM. - Air Inlet	
2					24	CAPSCREW -- 3/4-10-NC x 2 Lg. - (St.)	
3					24	LOCKWASHER -- 3/4 SAE Reg. - - (St.)	
4		3		X698	2	SILENCER ASSEM. - Air Suction	
5							
6							
7	K-1329	4		761-V6	3	MANIFOLD - Exhaust	
8		5		C-3660	2	GASKET - Manifold Center to End Section	
9					12	CAPSCREW -- 1-8-NC x 3 1/4 Lg. - (St.)	
10					12	NUT -- 1-8-NC-Hex. - - (St.)	
11					7	PIPE PLUG -- 2 Std. - - (C.I.)	
12		8			2	REDUCING BUSHING -- 2 x 1 Std. - - (C.I.)	
13		9			3	REDUCING BUSHING -- 2 x 1/2 Std. - - (C.I.)	
14		10			3	CLOSE NIPPLE -- 1/2 Std. - - (Brass)	
15	C-9053	11		C-9053-P 1/2	3	COCK - Exhaust Manifold Drain	
16		12		F-6633	6	ELBOW - Cyl. Head Exhaust Outlet	
17					6	PIPE PLUG -- 1/2 Std. - - (C.I.)	
18		14		C-3659	12	GASKET - Elbow to Cyl. Head & Manifold	
19					48	CAPSCREW -- 3/4-10-NC x 1 3/4 Lg. -(St.)	
20							
21							
22	C-90	17		3327	2	PIPE - Water By-Pass	
23		18		S-924	4	GASKET - By-Pass Pipe to Manifold	
24					8	CAPSCREW -- 5/8-11-NC x 1 1/2 Lg. - (St.)	
25					8	LOCKWASHER -- 5/8 SAE Reg. - - (St.)	
26		20		C-8286	1	FLANGE - Exhaust Manifold Water Inlet Pipe	
27		21		S-924	1	GASKET - Inlet Pipe Flange to Manifold	
28					2	CAPSCREW -- 5/8-11-NC x 2 3/4 Lg. - (St.)	
29					2	LOCKWASHER -- 5/8 SAE Reg. - - (St.)	
30		23		F-6669	1	ELBOW - Exhaust Manifold Water Outlet	
31					1	PIPE PLUG -- 1/2 Std. - - (C.I.)	
32					1	PIPE PLUG -- 3/4 Std. - - (C.I.)	
33		24		S-924	1	GASKET - Outlet Elbow to Manifold	
34					1	CAPSCREW -- 5/8-11-NC x 5 Lg. - - (St.)	
35					1	CAPSCREW -- 5/8-11-NC x 2 1/2 Lg. - (St.)	
36					2	LOCKWASHER -- 5/8 SAE Reg. - - (St.)	
37		27		S-1504	1	FLANGE - Exh. Manifold Exh. Outlet Pipe	
38	C-3661	28		763-V6	1	FLANGE - Exh. Manifold End (Blind)	
39		5		C-3660	2	GASKET - Flange to Manifold	
40					12	CAPSCREW -- 1-8-NC x 3 1/4 Lg. - (St.)	
41					12	NUT -- 1-8-NC-Hex. - - (St.)	
42							
43							
44							
45							
46							
47							
48							
49							
50							

FOR OPP. HAND SEE

FOR OPP. ROT. SEE

NAME INLET & EXHAUST MANIFOLD GROUP

ORIGINALLY ISSUED FOR 6 CYL. 14½x18--15x19 MAR.

FOR TOTAL REQUIREMENTS PER ENGINE MULTIPLY NO. REQ'D GIVEN ABOVE BY NO. REQ'D FOR THIS GROUP GIVEN ON INDEX SHEET

PARTS LIST

ATLAS IMPERIAL DIESEL ENGINE CO.
OAKLAND, CALIF. MATTOON, ILL.

FORM NO. 240 10-39

2L732

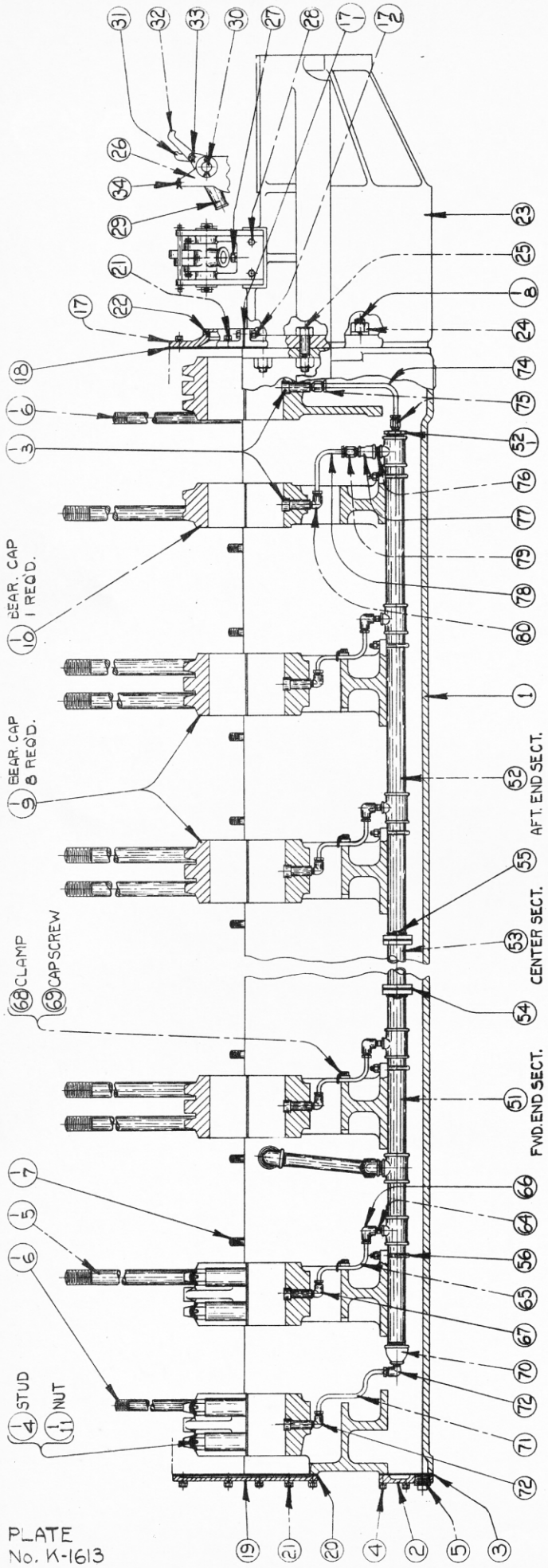

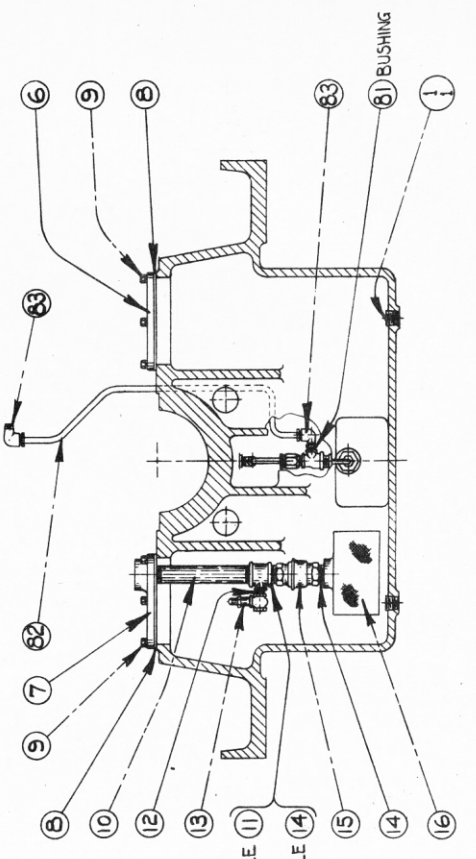

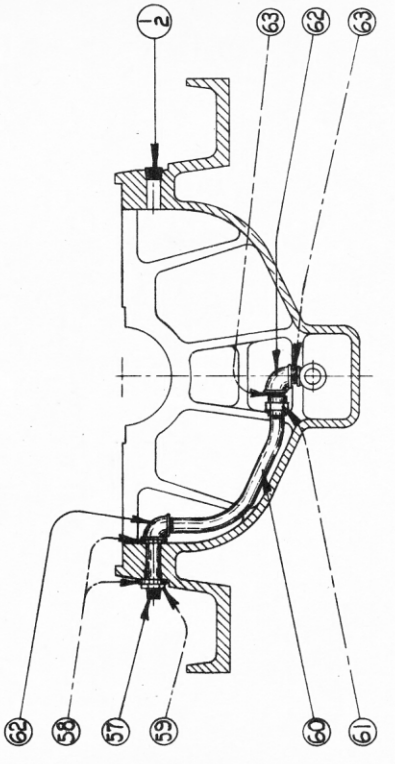

PLATE
No. K-1613

DO NOT ORDER PARTS BY REF. NUMBERS

EXTRA COPIES TO

TYPED BY MED DATE 1-28-42 ISSUED BY [illegible] DATE 1-29-42 CHKD. [illegible] APRVD. [illegible]

CHANGES #1 2-13-42 Line 17 was C-9067-P2

CHANGES

ALWAYS GIVE PART NUMBER—PART NAME—ENGINE NUMBER
FOR STD. HARDWARE WITHOUT PART NUMBER GIVE DESCRIPTION AND SIZE
* INDICATES PART NOT SERVICED INDIVIDUALLY

21829

PLATE NO. K-1613

ASSEM. DRWG. NO. K-1453

LINE NO.	DRWG. NO.	REF. NO.	*	PART NO.	NO. REQD.	PART NAME
1		1		X3461	1	BASE ASSEMBLY
2		2		F-5875	1	COVER - Lube Oil Manifold Hole
3		3		C-9595	1	GASKET - Cover to Base
4		4			10	CAPSCREW -- 1/2-13-NC x 1 1/2 Lg. - (St.)
5		4			10	LOCKWASHER -- 1/2 SAE Reg. - - (St.)
6		5			1	PIPE PLUG -- 2 Std. - (C.I.)
7		6		C-8140	1	COVER - Base Oil Sump Hole (Blind)
8		7		C-9250	1	COVER - Base Oil Sump Hole (Strainer Side)
9		8		C-8141	2	GASKET - Oil Sump Hole Cover to Base
10		9			12	CAPSCREW -- 3/8-16-NC x 1 Lg. - (St.)
11		9			12	LOCKWASHER -- 3/8 SAE Reg. - - (St.)
12		10			1	NIPPLE -- 2 x 12 Lg. - (Brass)
13		11			1	TEE -- 2 x 2 x 1/2 Std. Reducing - (Brass)
14		12			1	CLOSE NIPPLE -- 1/2 Std. - (Brass)
15		13		PG21L 1/2	1	VALVE - Pressure Relief (Set for 35 Lb.)
16		14			2	CLOSE NIPPLE -- 2 Std. - (Brass)
	C-9066	15		C-9066-P2	1	VALVE - Check
18	C-9249	16		X2513	1	STRAINER ASSEM. - Lube Oil (Sump)
19	W-1247	17		X2494	1	SEAL ASSEM. - Crankshaft Oil
20		18		F-5343	1	GASKET - Oil Seal to Base & Centerframe Cover
21		19		W-971	1	COVER - Crankshaft End
22		20		F-5343	1	GASKET - Cover to Base & Centerframe End Cover
23		21			22	CAPSCREW -- 1/2-13-NC x 1 1/4 Lg. - (St.)
24		21			22	LOCKWASHER -- 1/2 SAE Reg. - - (St.)
25		22		C-9340	2	FELT - Crankshaft Oil Seal
26						
27		23		K-2070	1	EXTENSION - Base
28		24			6	NUT -- 1 1/2-6-NC-Hex. - (St.)
29		24			6	LOCKWASHER -- 1 1/2 SAE Reg. - - (St.)
30	C-2724	25		C-2724L5	4	BOLT - Base Extension to Base
31		25			4	NUT -- 1 1/2-6-NC-Hex. - - (St.)
32						
33		26		C-157	2	BRACKET - Barring Over
34		27			2	CAPSCREW -- 3/4-10-NC x 1 3/4 Lg. - (St.)
35		28			4	CAPSCREW -- 3/4-10-NC x 2 Lg. - (St.)
36					6	LOCKWASHER -- 3/4 SAE Reg. - - (St.)
37		29		C-158	2	SOCKET - Barring Bar
38		30		C-160	2	PIN - Socket to Bracket
39		30			4	COTTER PIN -- 3/16 x 2 Lg. - (St.)
40	C-8351	31		4767	2	PAWL - Barring Over (Short)
41	C-8352	32		4768	2	PAWL - Barring Over (Long)
42		33		C-161	2	PIN - Pawl to Socket
43		33			4	COTTER PIN -- 1/8 x 1 1/2 Lg. - (St.)
44		33			4	PLAIN WASHER -- 1 SAE Std. - - (St.)
45		34		C-9326	2	PIN - Barring Over Pawl Safety
46		34			4	COTTER PIN -- 1/8 x 3/4 Lg. - (St.)
47						
48						
49						
50						

21829

FOR OPP. HAND SEE

FOR OPP. ROT. SEE

NAME BASE GROUP - - - - - (SAILING CLUTCH)

ORIGINALLY ISSUED FOR 6 CYL. 15 x 19 MARINE

FOR TOTAL REQUIREMENTS PER ENGINE MULTIPLY NO. REQ'D GIVEN ABOVE BY NO. REQ'D FOR THIS GROUP GIVEN ON INDEX SHEET

PARTS LIST

ATLAS IMPERIAL DIESEL ENGINE CO.
OAKLAND, CALIF. MATTOON, ILL.

FORM NO. 240 10-39

PLATE No. W-2011

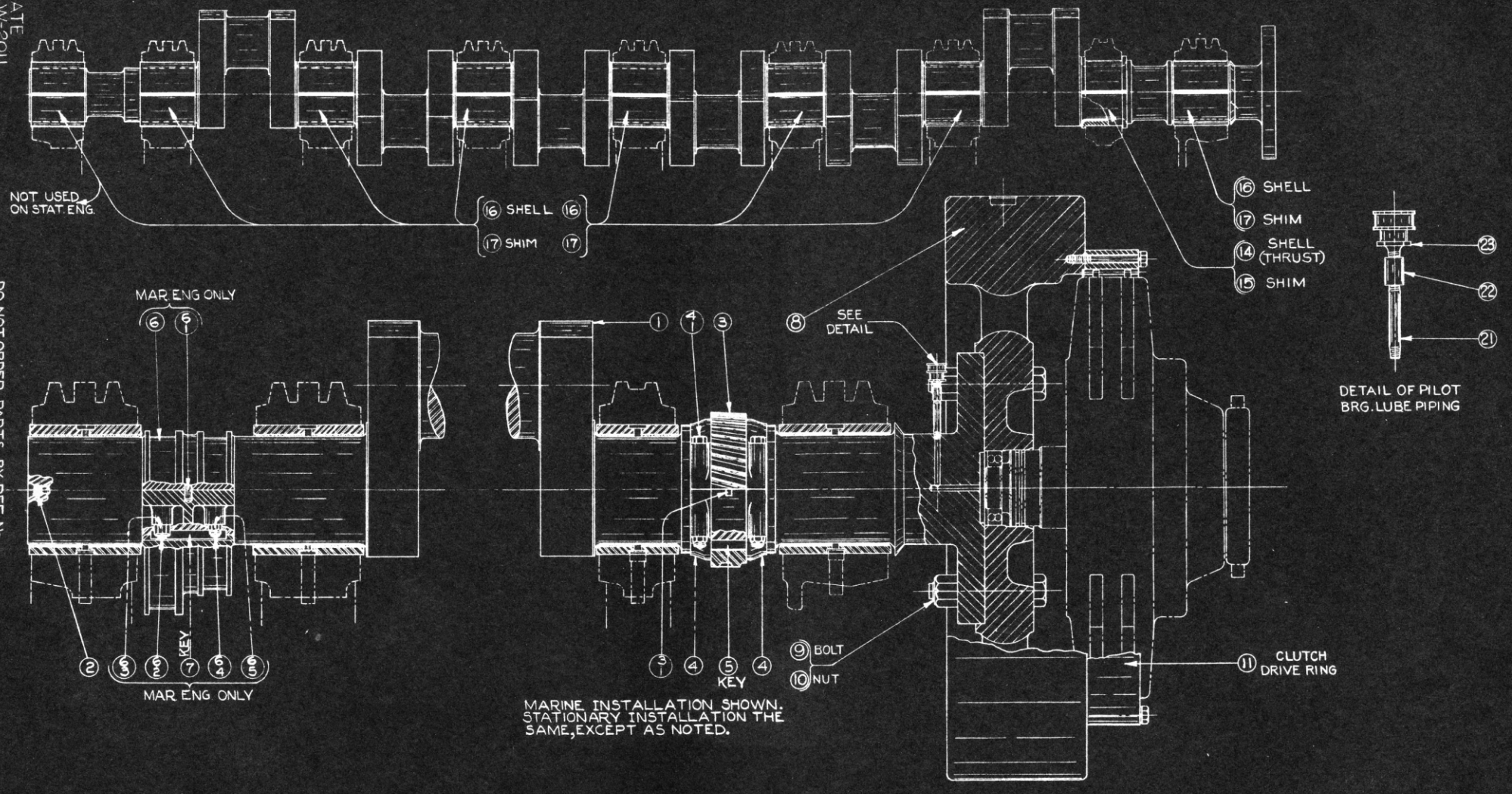

MARINE INSTALLATION SHOWN. STATIONARY INSTALLATION THE SAME, EXCEPT AS NOTED.

DO NOT ORDER PARTS BY REF. No.

EXTRA COPIES TO

TYPED BY MED DATE 1-28-42 ISSUED BY [illegible] DATE 1-29-42 CHKD. [illegible] APRVD. [illegible]

CHANGES

CHANGES

ALWAYS GIVE PART NUMBER—PART NAME—ENGINE NUMBER
FOR STD. HARDWARE WITHOUT PART NUMBER GIVE DESCRIPTION AND SIZE
* INDICATES PART NOT SERVICED INDIVIDUALLY

2L830

PLATE NO. W-2011

LINE NO.	DRWG. NO.	REF. NO.	*	PART NO.	NO. REQD.	PART NAME	ASSEM. DRWG. NO.
1		1		2C2915	1	CRANKSHAFT	
2		2			1	PIPE PLUG -- 3/8 Std. - Ctsk. Hd.-(C.I.)	
3	F-5871	3		X2642	1	GEAR ASSEM. - Crankshaft	
4	F-5872	4		X2643	2	CLAMP ASSEM. - Crankshaft Gear	
5	C-6916	5		C-6916L3 1/2	1	KEY - Gear to Crankshaft	
6	W-1326	6		X2645	1	ECCENTRIC ASSEM. - Air Comp. & Water Pump	
7	C-9610	7		C-9610L6 5/8	1	KEY - Eccentric to Crankshaft	
8							
9		8		K-2069	1	FLYWHEEL	
10	C-2624	9		C-2624L9	6	BOLT - Flywheel to Crankshaft	
11		10		S-2716	6	NUT - Flywheel to Crankshaft Bolt	
12					6	COTTER PIN -- 1/4 x 2 1/2 Lg. - (St.)	
13	2C2862	11		2C2862-P	1	RING - Clutch Drive	
14					12	CAPSCREW -- 3/4-10-NC x 5 3/4 Lg.-(St.)	
15					12	LOCKWASHER -- 3/4 SAE Reg. - - (St.)	
16							
17		14		W-1334	2	SHELL - Crankshaft Bearing (Short - Thrust)	
18	C-9636	15		C-9636-A	2	SHIM - Crankshaft Short Bearing (1/16)	
19	C-9636	15		C-9636-B	4	SHIM - Crankshaft Short Bearing (1/32)	
20	C-9636	15		C-9636-D	10	SHIM - Crankshaft Short Bearing (.010)	
21	C-9636	15		C-9636-E	8	SHIM - Crankshaft Short Bearing (.003)	
22							
23		16		W-1319	16	SHELL - Crankshaft Bearing	
24	C-9588	17		C-9588-A	16	SHIM - Crankshaft Bearing - (1/16)	
25	C-9588	17		C-9588-B	32	SHIM - Crankshaft Bearing - (1/32)	
26	C-9588	17		C-9588-D	80	SHIM - Crankshaft Bearing - (.010)	
27	C-9588	17		C-9588-E	64	SHIM - Crankshaft Bearing - (.003)	
28							
29							
30							
31							
32							
33				---- CLUTCH SHAFT PILOT BEARING LUBRICATION ----			
34		21			1	NIPPLE -- 1/4 x 3 1/2 Lg. - (W.I.)	
35		22			1	COUPLING -- 1/4 Std. Pipe - - (M.I.)	
36		23			1	GREASE CUP -- Lunkenheimer Guard #1 -- 1/4 Pipe Thread-(Brass)	
37							
38							
39							
40							
41							
42							
43							
44							
45							
46							
47							
48							
49							
50							

FOR OPP. HAND SEE

FOR OPP. ROT. SEE

NAME CRANKSHAFT & FLYWHEEL GROUP - - - (SAILING CLUTCH)

ORIGINALLY ISSUED FOR 6 CYL. 15 x 19 MARINE

FOR TOTAL REQUIREMENTS PER ENGINE MULTIPLY NO. REQ'D GIVEN ABOVE BY NO. REQ'D FOR THIS GROUP GIVEN ON INDEX SHEET

PARTS LIST

ATLAS IMPERIAL DIESEL ENGINE CO.
OAKLAND, CALIF. MATTOON, ILL.

FORM NO. 240 10-39

2L830

PLATE No. K-2083

DO NOT ORDER PARTS BY REF. NUMBERS

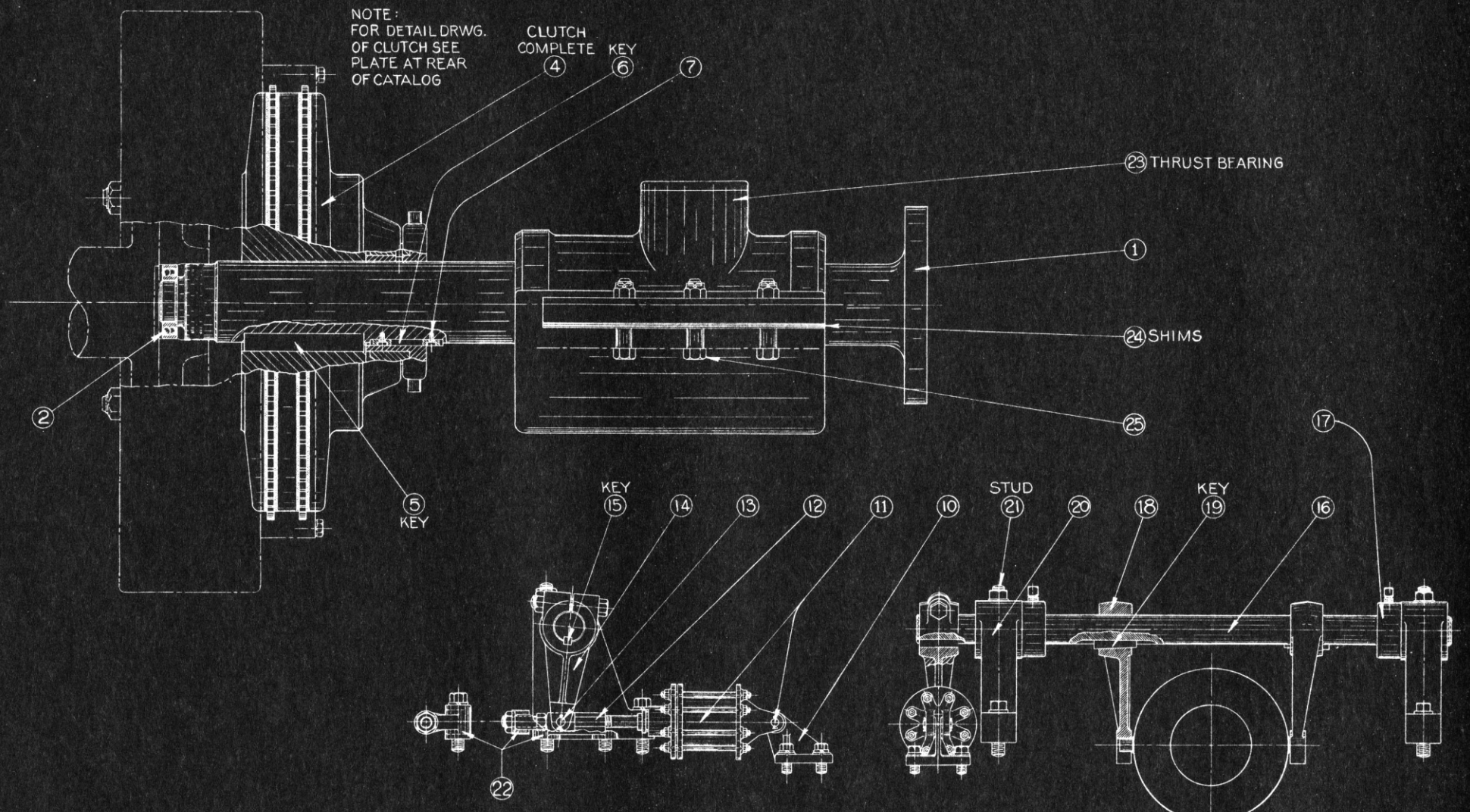

EXTRA COPIES TO

TYPED BY MED DATE 3-6-42 ISSUED BY [illegible] DATE 3-6-42 CHKD. [illegible] APRVD. [illegible]

CHANGES
#1 Revised & Retyped From 1-29-42
#2 6-19-42 Removed Lines 8 to 12 Incl. & Line 3

CHANGES

ALWAYS GIVE PART NUMBER—PART NAME—ENGINE NUMBER
FOR STD. HARDWARE WITHOUT PART NUMBER GIVE DESCRIPTION AND SIZE
* INDICATES PART NOT SERVICED INDIVIDUALLY

21831

PLATE NO. K-2083

LINE NO.	DRWG. NO.	REF. NO.	*	PART NO.	NO. REQD.	PART NAME	ASSEM. DRWG. NO.
1		1		W-1990	1	SHAFT - Thrust	
2	C-9688	2		5878	1	BALL BEARING - Thrust Shaft Pilot	
		3					
4	W-1991	4		W-1991-P	1	CLUTCH - Sailing	
5	C-7324	5		C-7324L10 1/4	1	KEY - Clutch Hub to Shaft	
6		6		2C1800	1	KEY - Clutch Cone to Shaft	
7		7			2	CAPSCREW--1/4-20-NC x 5/8 Lg.-Fill. Hd.-(St.)	
8							
9							
10							
11							
12							
13							
14		10		F-6743	1	BRACKET - Air Cylinder Anchor	
15					4	CAPSCREW -- 3/4-10-NC x 2 Lg. - (St.)	
16					4	LOCKWASHER -- 3/4 SAE Reg. - - (St.)	
17	F-6750	11		F-6750-P	1	AIR CYLINDER	
18		12		2C2860	1	ROD-End - Air Cyl. Piston Rod	
19					1	HALF NUT -- 1-8-NC-Hex. - (St.)	
20		13		S-3355	1	PIN - Rod-End to Lever	
21					2	COTTER PIN -- 5/32 x 1 1/4 Lg. - (St.)	
22		14		F-6747	1	LEVER - Clutch Shifter Shaft Control	
23	S-3137	15		5286	1	KEY - Lever to Shaft	
24					1	CAPSCREW -- 1-8-NC x 5 3/4 Lg.-(St.)	
25					1	NUT -- 1-8-NC-Hex. - - (St.)	
26		16		F-6744	1	SHAFT - Clutch Shifter	
27		17		C-9655	2	COLLAR - Shaft Retainer	
28					2	SETSCREW--3/4-10-NC x 1 1/2 Lg-Sq.Hd.Cup Pt(St.)	
29		18		F-6748	2	LEVER - Clutch Shifter Collar Control	
30	S-3234	19		5376	2	KEY - Lever to Shaft	
31		20		F-5902	2	STAND - Clutch Shifter Shaft	
32					2	CAPSCREW -- 1-8-NC x 4 Lg. - (St.)	
33	C-2016	21		C-2016L15	2	STUD - Clutch Shifter Shaft Stand	
34					2	NUT -- 1-8-NC-Hex. - (St.)	
35					4	LOCKWASHER(Cap. & Nut)--1 SAE Reg. - (St.)	
36		22		2C2861	1	STOP - Air Cylinder Piston Rod	
37					1	CAPSCREW--1-8-NC x 3 1/2 Lg. - (St.)	
38					1	HALF NUT -- 1-8-NC-Hex. - - (St.)	
39					2	CAPSCREW -- 1-8-NC x 4 1/4 Lg. - (St.)	
40					2	LOCKWASHER -- 1 SAE Reg. - - (St.)	
41	C-9229	23		C-9229-P	1	BEARING - Thrust	
42	C-8045	24		C-8045-A	2	SHIM - Thrust Bearing to Base - (1/16)	
43	C-8045	24		C-8045-B	4	SHIM - Thrust Bearing to Base - (1/32)	
44	C-8045	24		C-8045-D	10	SHIM - Thrust Bearing to Base - (.010)	
45	C-8045	24		C-8045-E	8	SHIM - Thrust Bearing to Base - (.003)	
46	C-2618	25		C-2618L6	6	BOLT - Thrust Bearing to Base	
47					6	CASTLE NUT -- 1 1/8-12-NF-Hex. - (St.)	
48					6	COTTER PIN -- 3/16 x 2 Lg. - (St.)	
49					4	PACKING(Thrust Brg.)--Garlock #90VS(or Eq.) 3/8 Sq. x 25 Lg.	
50							

FOR OPP. HAND SEE

FOR OPP. ROT. SEE

NAME SAILING CLUTCH & THRUST BEARING GROUP - - (TWIN DISC)

ORIGINALLY ISSUED FOR 6 CYL. 14½x18--15x19 MARINE

FOR TOTAL REQUIREMENTS PER ENGINE MULTIPLY NO. REQ'D GIVEN ABOVE BY NO. REQ'D FOR THIS GROUP GIVEN ON INDEX SHEET

PARTS LIST

ATLAS IMPERIAL DIESEL ENGINE CO.
OAKLAND, CALIF. MATTOON, ILL.

FORM NO. 249 10-39

21831

EXTRA COPIES TO

TYPED BY MED DATE 1-31-42 ISSUED BY [illegible] DATE 1-31-42 CHKD. [illegible] APRVD. [illegible]

CHANGES

CHANGES

ALWAYS GIVE PART NUMBER—PART NAME—ENGINE NUMBER
FOR STD. HARDWARE WITHOUT PART NUMBER GIVE DESCRIPTION AND SIZE
* INDICATES PART NOT SERVICED INDIVIDUALLY

PLATE NO. 2L832

LINE NO.	DRWG. NO.	REF. NO.	*	PART NO.	NO. REQD.	PART NAME	ASSEM. DRWG. NO.
1	2C2866			2C2866-P	1	VALVE - Sailing Clutch Air Cyl. Control	
2					2	CAPSCREW -- 1/2-13-NC x 1 1/2 Lg. - (St.)	
3					2	LOCKWASHER -- 1/2 SAE Reg. - - (St.)	
4							
5							
6							
7							
8							
9							
10							
11							
12							
13							
14							
15							
16							
17							
18							
19							
20							
21							
22							
23							
24							
25							
26							
27							
28							
29							
30							
31							
32							
33							
34							
35							
36							
37							
38							
39							
40							
41							
42							
43							
44							
45							
46							
47							
48							
49							
50							

2L832

FOR OPP. HAND SEE

FOR OPP. ROT. SEE

NAME AIR PIPING GROUP - - - - - - (SAILING CLUTCH)

ORIGINALLY ISSUED FOR 6 CYL. 15 x 19 MARINE

FOR TOTAL REQUIREMENTS PER ENGINE MULTIPLY NO. REQ'D GIVEN ABOVE BY NO. REQ'D FOR THIS GROUP GIVEN ON INDEX SHEET

PARTS LIST

ATLAS IMPERIAL DIESEL ENGINE CO.
OAKLAND, CALIF. MATTOON, ILL.

FORM NO. 249 10-39

PLATE
No. K-1589

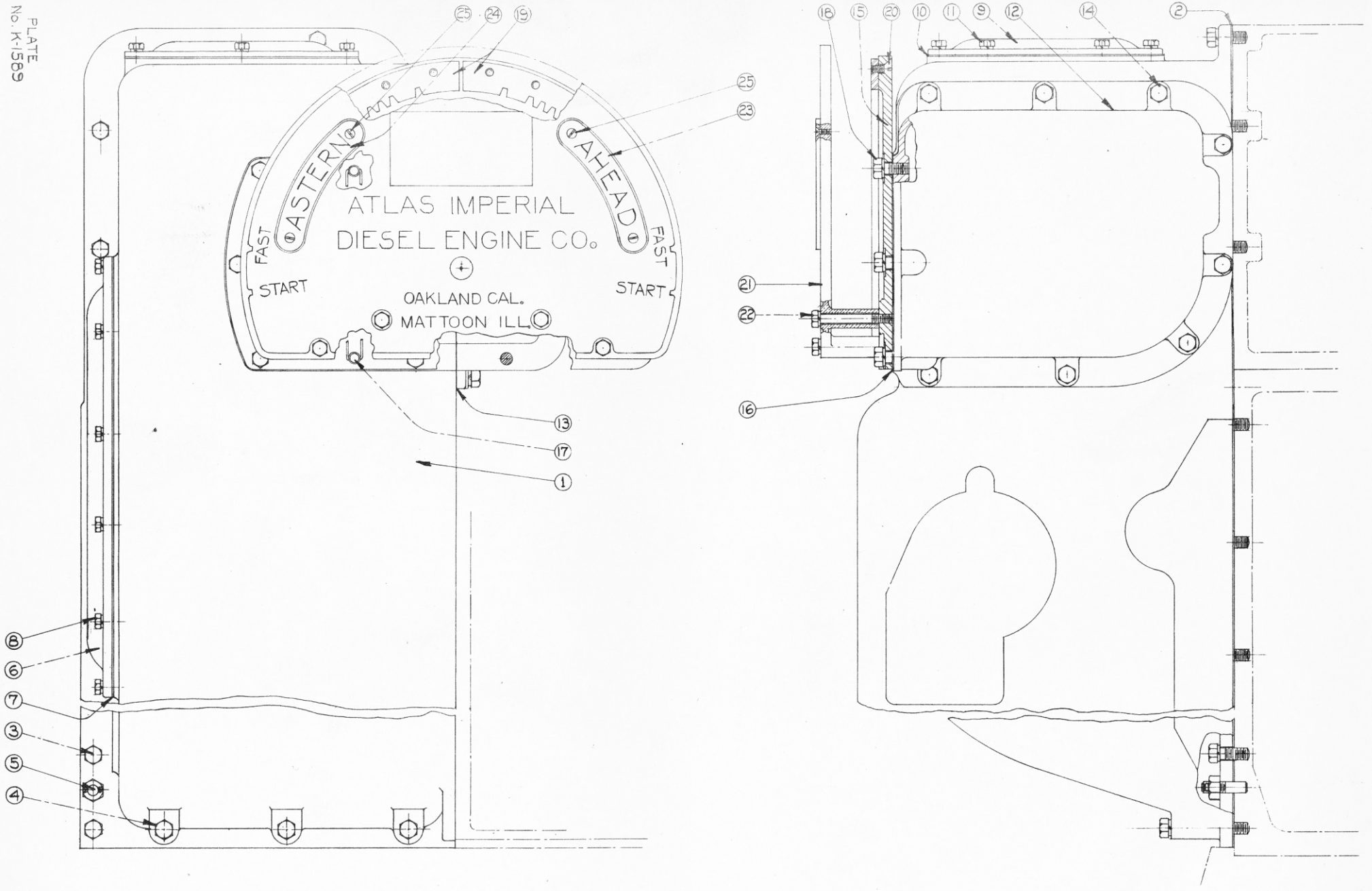

EXTRA COPIES TO

TYPED BY MED DATE 3-2-42 ISSUED BY [illegible] DATE 4-17-42 CHKD. [illegible] APRVD. [illegible]

CHANGES

CHANGES

ALWAYS GIVE PART NUMBER—PART NAME—ENGINE NUMBER
FOR STD. HARDWARE WITHOUT PART NUMBER GIVE DESCRIPTION AND SIZE
* INDICATES PART NOT SERVICED INDIVIDUALLY

2L870

PLATE NO. K-1589

LINE NO.	DRWG. NO.	REF. NO.	*	PART NO.	NO. REQD.	PART NAME	ASSEM. DRWG. NO.
1		1		K-1426	1	Housing - Engine Control	
2		2		F-5804	1	GASKET - Housing to Centerframe & Rack Housing	
3		3			9	CAPSCREW -- 1/2-13-NC x 1 1/4 Lg. - (St.)	
4		4			3	CAPSCREW -- 1/2-13-NC x 3 1/2 Lg. - (St.)	
5					12	LOCKWASHER -- 1/2 SAE Reg. - - (St.)	
6	C-6633	5		C-6633L2	2	PIN - Housing to Centerframe Dowel	
7		5			2	NUT -- 1/2-13-NC-Hex. - - (St.)	
8		5			2	COTTER PIN -- 3/32 x 3/4 Lg. - (St.)	
9		6		F-5788	1	COVER - Engine Control Housing Aft Side	
10		7		F-5820	1	GASKET - Cover to Housing	
11		8			12	CAPSCREW -- 3/8-16-NC x 7/8 Lg. - (St.)	
12		8			12	LOCKWASHER -- 3/8 SAE Reg. - - (St.)	
13		9		F-5774	1	COVER - Engine Control Housing Top	
14		10		C-9401	1	GASKET - Cover to Housing	
15		11			6	CAPSCREW -- 3/8-16-NC x 7/8 Lg. - (St.)	
16		11			6	LOCKWASHER -- 3/8 SAE Reg. - - (St.)	
17		12		W-1283	1	COVER - Engine Control Housing Fwd. Side	
18		13		C-9410	1	GASKET - Cover to Housing	
19		14			8	CAPSCREW -- 1/2-13-NC x 1 1/4 Lg. -(St.)	
20		14			8	LOCKWASHER -- 1/2 SAE Reg. - - (St.)	
21		15		W-1351	1	COVER - Engine Control Housing Front	
22		16		F-5819	1	GASKET - Cover to Housing	
23		17		S-3354	2	PIN - Front Cover to Housing Dowel	
24					1	WIRE -- #16 Ga. x 18 Lg. - (St.)	
25		18			8	CAPSCREW -- 1/2-13-NC x 1 Lg. - (St.)	
26					8	LOCKWASHER -- 1/2 SAE Reg. - - (St.)	
27		19		F-6732	1	SECTOR - Engine Control Handle (Ahead)	
28		19		F-6733	1	SECTOR - Engine Control Handle (Astern)	
29				2C2183	8	SPACER - Control Handle Sector	
30		20			8	CAPSCREW--5/16-18-NC x 2 Lg.-Flat Hd.-(St.)	
31		21		K-1623	1	PANEL - Engine Control Indicator	
32	C-8477			C-8477L1 1/2	4	SPACER - Indicator Panel	
33		22			4	CAPSCREW -- 1/2-13-NC x 4 3/4 Lg. - (Brass)	
34					4	LOCKWASHER -- 1/2 SAE Reg. - - (St.)	
35		23		C-9270	1	PLATE - Direction Indicator (Ahead)	
36		24		C-9271	1	PLATE - Direction Indicator (Astern)	
37		25			4	MACHINE SCREW--#10-24 x 1/2 Lg.-Flat Hd.(Brass)	
38							
39				C-7446	1	PLATE - Name	
40					6	DRIVE SCREW--Parker-Kalon Hardened Metallic	
41						#6 x 3/8 Lg. - (St.)	
42							
43							
44							
45							
46							
47							
48							
49							
50							

2L870

FOR OPP. HAND SEE 2L871

FOR OPP. ROT. SEE

NAME ENGINE CONTROL HOUSING & COVERS GROUP - - (REMOTE CONTROL)

ORIGINALLY ISSUED FOR 6 CYL. 14 1/2 x 18 MAR.- R.H.

FOR TOTAL REQUIREMENTS PER ENGINE MULTIPLY NO. REQ'D GIVEN ABOVE BY NO. REQ'D FOR THIS GROUP GIVEN ON INDEX SHEET

PARTS LIST

ATLAS IMPERIAL DIESEL ENGINE CO.
OAKLAND, CALIF. MATTOON, ILL.

FORM NO. 240 10-39

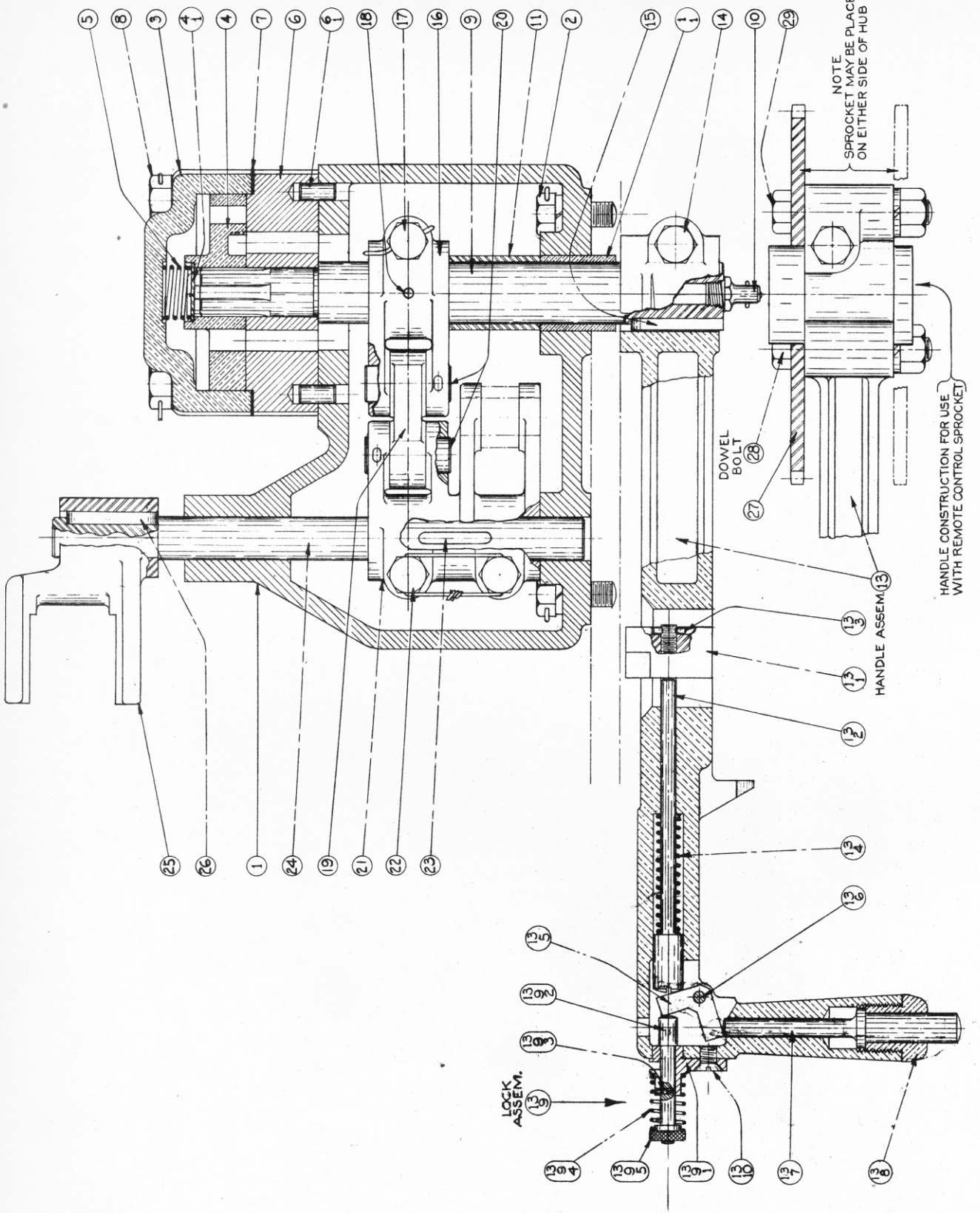

PLATE No.
K-1614 ED.2

DO NOT ORDER PARTS BY REF. NUMBERS

EXTRA COPIES TO

TYPED BY MED DATE 3-3-42 ISSUED BY [illegible] DATE 4-17-42 CHKD. [illegible] APRVD. [illegible]

CHANGES

CHANGES

ALWAYS GIVE PART NUMBER—PART NAME—ENGINE NUMBER
FOR STD. HARDWARE WITHOUT PART NUMBER GIVE DESCRIPTION AND SIZE
* INDICATES PART NOT SERVICED INDIVIDUALLY

2L874

PLATE NO. K-1614 (Ed 2)

LINE NO.	DRWG. NO.	REF. NO.	*	PART NO.	NO. REQD.	PART NAME	ASSEM. DRWG. NO.
1	F-5811	1		X2583	1	BRACKET ASSEM. - Engine Control Valve	
2	C-2408	2		C-2408L1 1/4	4	CAPSCREW - Bracket to Control Housing Cover	
3					4	LOCKWASHER -- 1/2 SAE Reg. - - (St.)	
4					2	WIRE -- #16 Ga. x 8 Lg. - (St.)	
5		3		F-5766	1	HOUSING - Engine Control Valve Disc	
6	F-5765	4		X2597	1	DISC ASSEM. - Engine Control Valve	
7		5		C-9493	1	SPRING - Engine Control Valve Disc	
8		6		X2593	1	PLATE ASSEM. - Engine Control Valve	
9		7		C-9487	1	GASKET - Valve Plate to Housing	
10	C-2410	8		C-2410L3 5/8	4	CAPSCREW - Engine Control Valve to Bracket	
11					1	WIRE -- #16 Ga. x 20 Lg. - (St.)	
12		9		F-5775	1	SHAFT - Engine Control Handle	
13		10			1	ALEMITE FITTING -- No. A-359 - 1/4 Male P.T.	
14		11		C-9650	1	SPACER - Engine Control Shaft Lever	
15							
16							
17							
18							
19							
20							
21							
22	W-1801	13		X3261	1	HANDLE ASSEM.-Engine Control	
23		14			1	CAPSCREW -- 1/2-13-NC x 2 1/4 Lg. - (St.)	
24	C-6806	15		C-6806L1 7/8	1	KEY - Handle to Shaft	
25		16		C-9315	1	LEVER - Engine Control Shaft	
26	C-2408	17		C-2408L2	1	CAPSCREW - Control Shaft Lever Clamp	
27					1	WIRE -- #16 Ga. x 10 Lg. - (St.)	
28		18			1	TAPER PIN -- #3 x 2 1/4 Lg. - (St.)	
29		19		C-9455	1	LINK - Control Shaft Lever to Interlock Lever	
30		20		C-9453	2	PIN - Link to Levers	
31					2	COTTER PIN -- 5/32 x 1 3/4 Lg. - (St.)	
32		21		F-5860	1	LEVER - Interlock & Gov. Control	
33	C-2408	22		C-2408L1 1/2	2	CAPSCREW - Control Lever Clamp	
34					1	WIRE -- #16 Ga. x 6 Lg. - (St.)	
35	C-7304	23		C-7304L1 1/2	1	KEY - Lever to Shaft	
36		24		C-9454	1	SHAFT - Interlock Control Lever & Fork	
37		25		F-5785	1	FORK - Interlock Control	
38	C-7304	26		C-7304L1 7/8	1	KEY - Fork to Shaft	
39							
40		27		F-6477	1	SPROCKET - Engine Control	
41	C-2708	28		C-2708L3	2	CAPSCREW - Sprocket to Handle	
42		29			2	CAPSCREW -- 1/2-13-NC x 2 3/4 Lg. - (St.)	
43					4	NUT -- 1/2-13-NC-Hex. - - (St.)	
44					4	LOCKWASHER -- 1/2 SAE Reg. - - (St.)	
45							
46							
47							
48							
49							
50							

2L874

FOR OPP. HAND SEE 2L875

FOR OPP. ROT. SEE

NAME ENGINE CONTROL HANDLE & VALVE GROUP - - (REMOTE CONTROL)

ORIGINALLY ISSUED FOR 14½ x 18--15 x 19 MAR.-R.H.

FOR TOTAL REQUIREMENTS PER ENGINE MULTIPLY NO. REQ'D GIVEN ABOVE BY NO. REQ'D FOR THIS GROUP GIVEN ON INDEX SHEET

PARTS LIST

ATLAS IMPERIAL DIESEL ENGINE CO.
OAKLAND, CALIF. MATTOON, ILL.

FORM NO. 240 10-39

EXTRA COPIES TO

TYPED BY MED DATE 4-7-42 ISSUED BY [illegible] DATE 4-7-42 CHKD. MR APRVD. [illegible]

CHANGES

CHANGES

ALWAYS GIVE PART NUMBER—PART NAME—ENGINE NUMBER
FOR STD. HARDWARE WITHOUT PART NUMBER GIVE DESCRIPTION AND SIZE
* INDICATES PART NOT SERVICED INDIVIDUALLY

PLATE NO. 2L917

ASSEM. DRWG. NO. W-1948

LINE NO.	DRWG. NO.	REF. NO.	*	PART NO.	NO. REQD.	PART NAME
1				2C2526	1	BRACKET - Revolution Counter
2				2C2528	1	CAP - Counter Bracket
3					2	CAPSCREW -- 3/8-16-NC x 2 1/4 Lg. - (St.)
4						
5	2C2937			2C2937-P	1	COUNTER - Revolution
6					3	MACHINE SCREW--1/4-20 x 3/4 Lg.-Fill. Hd.-(St.)
7					3	LOCKWASHER -- 1/4 SAE Reg. - (St.)
8						
9				2C2529	1	LEVER - Revolution Counter
10				2C2530	1	PIN - Revolution Counter Lever
11						
12				2C2525	1	COLLAR - Rev. Counter Drive(Clamps to Push-Rod)
13					2	MACHINE SCREW--5/16-18 x 1 1/4 Lg.-Fill.Hd.-(St)
14						
15				2C2527	1	NAME PLATE
16					2	MACHINE SCREWS--#8-36 x 3/8 Lg.-Rnd. Hd.(Brass)
17						
18						
19						
20						
21						
22						
23						
24						
25						
26						
27						
28						
29						
30						
31						
32						
33						
34						
35						
36						
37						
38						
39						
40						
41						
42						
43						
44						
45						
46						
47						
48						
49						
50						

FOR OPP. HAND SEE

FOR OPP. ROT. SEE

NAME REVOLUTION COUNTER GROUP

ORIGINALLY ISSUED FOR 6 CYL. 14 1/8 x 18 -- 15x19 MAR.

FOR TOTAL REQUIREMENTS PER ENGINE MULTIPLY NO. REQ'D GIVEN ABOVE BY NO. REQ'D FOR THIS GROUP GIVEN ON INDEX SHEET

PARTS LIST

ATLAS IMPERIAL DIESEL ENGINE CO.
OAKLAND, CALIF. MATTOON, ILL.

FORM NO. 240 10-39

2L917

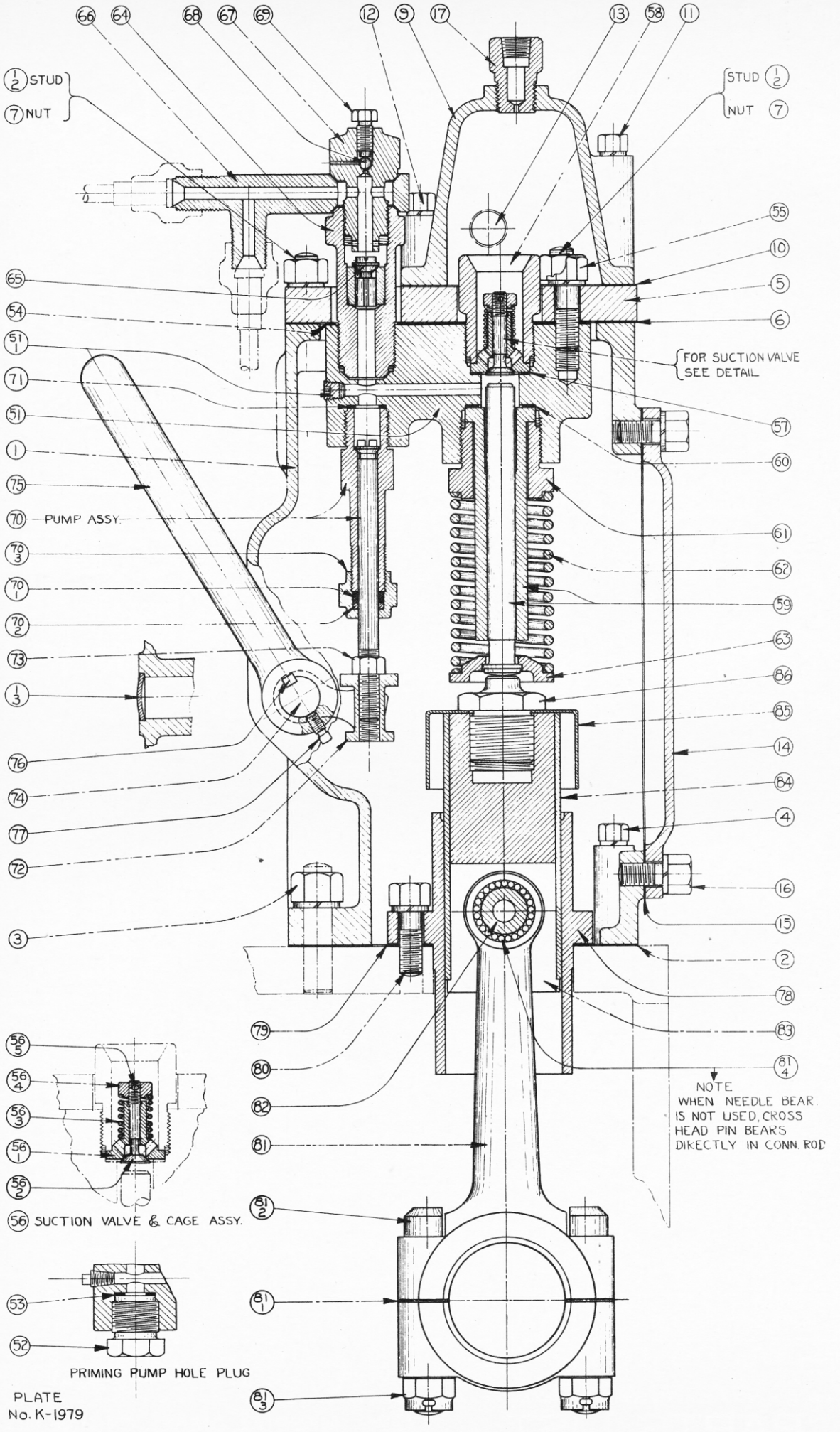
66 64 68 67 69 12 9 17 13 58 11
1/2 STUD
7 NUT
STUD 1/2
NUT 7
55
10
5
6
65
54
51/1
71
51
1
75
70 PUMP ASSY
70/3
70/1
70/2
73
1/3
76
74
77
72
3
FOR SUCTION VALVE SEE DETAIL
57
60
61
62
59
63
86
85
14
84
4
16
15
2
78
83
81/4
79
80
82
81
81/2
81/1
81/3
56/5
56/4
56/3
56/1
56/2
56 SUCTION VALVE & CAGE ASSY.
53
52
PRIMING PUMP HOLE PLUG
NOTE
WHEN NEEDLE BEAR. IS NOT USED, CROSS HEAD PIN BEARS DIRECTLY IN CONN. ROD
PLATE
No. K-1979

EXTRA COPIES TO

TYPED BY MED DATE 11-11-41 ISSUED BY [illegible] DATE 11-11-41 CHKD. [illegible] APRVD. [illegible]

CHANGES

#4 Revised & Retyped From 3-30-38
#5 10-2-42 Line 17 was 3/8 Lockwashers

CHANGES

L-8664

ALWAYS GIVE PART NUMBER—PART NAME—ENGINE NUMBER
FOR STD. HARDWARE WITHOUT PART NUMBER GIVE DESCRIPTION AND SIZE
* INDICATES PART NOT SERVICED INDIVIDUALLY

PLATE NO. K-1979

LINE NO.	DRWG. NO.	REF. NO.	*	PART NO.	NO. REQD.	PART NAME	ASSEM. DRWG. NO. A-210
1	F-5329	1		X2161	1	HOUSING ASSEM. - H.P. Fuel Pump	
2		2		C-8104	1	GASKET - Housing to Centerframe	
3					3	CAPSCREW -- 5/8-11-NC x 2 Lg. - (St.)	
4					2	CAPSCREW -- 5/8-11-NC x 4 Lg. - (St.)	
5					5	LOCKWASHER -- 5/8 SAE Reg. - - (St.)	
6					2	CAPSCREW -- 3/8-16-NC x 2 3/4 Lg. - (St.)	
7					2	LOCKWASHER -- 3/8 SAE Reg. - - (St.)	
8		5		W-962	1	PLATE - Fuel Pump Mounting	
9					1	PIPE PLUG(Mtg. Plate Drain)--1/4 Std.(C.I.)	
10		6		C-8105	1	GASKET - Plate to Housing	
11					8	NUT -- 1/2-13-NC-Hex. - - (St.)	
12					8	LOCKWASHER -- 1/2 SAE Reg. - - (St.)	
13		9		W-961	1	COVER - Fuel Pump Mounting Plate Top	
14		10		C-8106	1	GASKET - Cover to Mounting Plate	
15					4	CAPSCREW -- 3/8-16-NC x 3 1/4 Lg. - (St.)	
16					4	CAPSCREW -- 3/8-16-NC x 2 Lg. - - (St.)	
17				C-5919	8	GASKET - Capscrew	
18					2	PIPE PLUG -- 1/2 Std. - C't's'k. Hd.-(C.I.)	
19		14		C-8085	1	COVER - Fuel Pump Housing Side	
20		15		C-8107	1	GASKET - Cover to Housing	
21					4	CAPSCREW -- 1/2-13-NC x 1 Lg. - (St.)	
22					4	LOCKWASHER -- 1/2 SAE Reg. - - (St.)	
23		17		C-9512	1	PLUG - Mounting Plate Cover By-Pass	
24							
25							
26							
27							
28							
29							
30							
31							
32							
33							
34							
35							
36							
37							
38							
39							
40							
41							
42							
43							
44							
45							
46							
47							
48							
49							
50							

FOR OPP. HAND SEE

FOR OPP. ROT. SEE

NAME H.P. FUEL PUMP HOUSING & COVERS GROUP

ORIGINALLY ISSUED FOR 6 CYL. 14 1/2 x 18 MAR.-STAT.

FOR TOTAL REQUIREMENTS PER ENGINE MULTIPLY NO. REQ'D GIVEN ABOVE BY NO. REQ'D FOR THIS GROUP GIVEN ON INDEX SHEET

PARTS LIST

ATLAS IMPERIAL DIESEL ENGINE CO.
OAKLAND, CALIF. MATTOON, ILL.

FORM NO. 240 10-39

L-8664

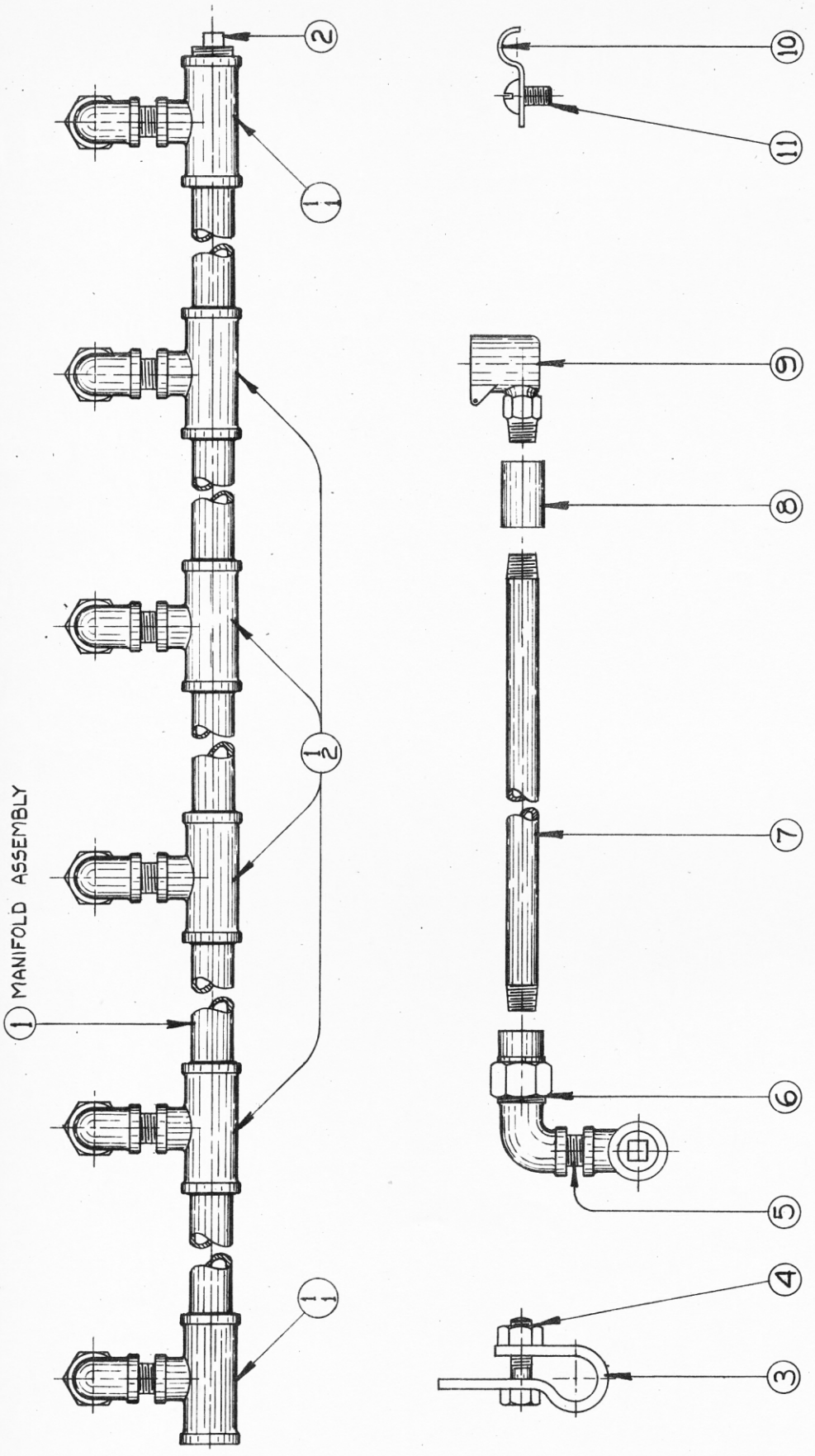

PLATE
No. W-1365

DO NOT ORDER PARTS BY REF. NUMBERS

EXTRA COPIES TO

TYPED BY MED DATE 4/14/38 ISSUED BY DATE 4-14-38 CHKD. APRVD.

CHANGES

Retyped From Sheet Dated 4/5/37
#2 11-18-41 Revised
#3 11-12-42 Line 8 Crane No. Was #590

CHANGES

ALWAYS GIVE PART NUMBER—PART NAME—ENGINE NUMBER
FOR STD. HARDWARE WITHOUT PART NUMBER GIVE DESCRIPTION AND SIZE
* INDICATES PART NOT SERVICED INDIVIDUALLY

L-8741

PLATE NO. W-1365

LINE NO.	DRWG. NO.	REF. NO.	*	PART NO.	NO. REQD.	PART NAME	ASSEM. DRWG. NO.
1	F-6447	1		X3224	1	Manifold Assembly - Spray Valve Drain	
2		2			1	Pipe Cap -- 1/4 Std. - - (M.I.)	
3		3		C-8263	5	Clamp - Manifold Support	
4		4			5	Capscrew -- 1/4-20-NC x 3/4 Lg. - - (Steel)	
5		4			5	Nut -- 1/4-20-NC-Hex. - - (Steel)	
6							
7		5			6	Close Nipple -- 1/8 Std. - - (W.I.)	
8		6			6	Union Elbow -- 1/8 Std. (Crane #524 1/2 or Eq)(Brass)	
9		7		F-5408	6	Pipe - Fuel Drain	
10		8			6	Coupling -- 1/8 Std. Pipe - - (M.I.)	
11		9			6	Oil Cup -- 1/8 Std. Hinged Lid - (Gits #802 or Eq.)(Steel)	
12							
13		10		S-2810	6	Clamp - Drain Pipe to Cyl. Head	
14		11			6	Machine Screw -- 1/4-20 x 3/8 Lg. - Rnd. Hd. - (Steel)	
15							
16							
17							
18							
19							
20							
21							
22							
23							
24							
25							
26							
27							
28							
29							
30							
31							
32							
33							
34							
35							
36							
37							
38							
39							
40							
41							
42							
43							
44							
45							
46							
47							
48							
49							
50							

FOR OPP. HAND SEE

FOR OPP. ROT. SEE

NAME SPRAY VALVE DRAIN MANIFOLD GROUP

ORIGINALLY ISSUED FOR 6 CYL. 14 1/2 x 18 MAR. - STAT.

FOR TOTAL REQUIREMENTS PER ENGINE MULTIPLY NO. REQ'D GIVEN ABOVE BY NO. REQ'D FOR THIS GROUP GIVEN ON INDEX SHEET

PARTS LIST

ATLAS IMPERIAL DIESEL ENGINE CO.
OAKLAND, CALIF. MATTOON, ILL.

FORM NO. 240-3M-10-37

L-8741

EXTRA COPIES TO

TYPED BY MED DATE 5/3/38 ISSUED BY BR DATE 5-11-38 CHKD. CBR APRVD. D

CHANGES

#1 Retyped From Sheet Dated 4/6/37 -- Added Part No. C-9510-P

CHANGES

Lube Oil Cooler Group

ALWAYS GIVE PART NUMBER—PART NAME—ENGINE NUMBER
FOR STD. HARDWARE WITHOUT PART NUMBER GIVE DESCRIPTION AND SIZE
* INDICATES PART NOT SERVICED INDIVIDUALLY

PLATE NO. L-8749

LINE NO.	DRWG. NO.	REF. NO.	*	PART NO.	NO. REQD.	PART NAME	ASSEM. DRWG. NO.
1	C-9510			C-9510-P	1	Cooler - Lube Oil	
2					4	Capscrew -- 5/8-11-NC x 1 1/2 Lg. - - (Steel)	
3					4	Lockwasher -- 5/8 SAE Reg.	
4							
5							
6							
7							
8							
9							
10							
11							
12							
13							
14							
15							
16							
17							
18							
19							
20							
21							
22							
23							
24							
25							
26							
27							
28							
29							
30							
31							
32							
33							
34							
35							
36							
37							
38							
39							
40							
41							
42							
43							
44							
45							
46							
47							
48							
49							
50							

FOR OPP. HAND SEE

FOR OPP. ROT. SEE

FORM NO. 240-3M-10-37

NAME LUBE OIL COOLER GROUP

ORIGINALLY ISSUED FOR 6 CYL. 14 1/2 x 18 MAR. - STAT.

FOR TOTAL REQUIREMENTS PER ENGINE MULTIPLY NO. REQ'D GIVEN ABOVE BY NO. REQ'D FOR THIS GROUP GIVEN ON INDEX SHEET

PARTS LIST

ATLAS IMPERIAL DIESEL ENGINE CO.
OAKLAND, CALIF. MATTOON, ILL.

L-8749

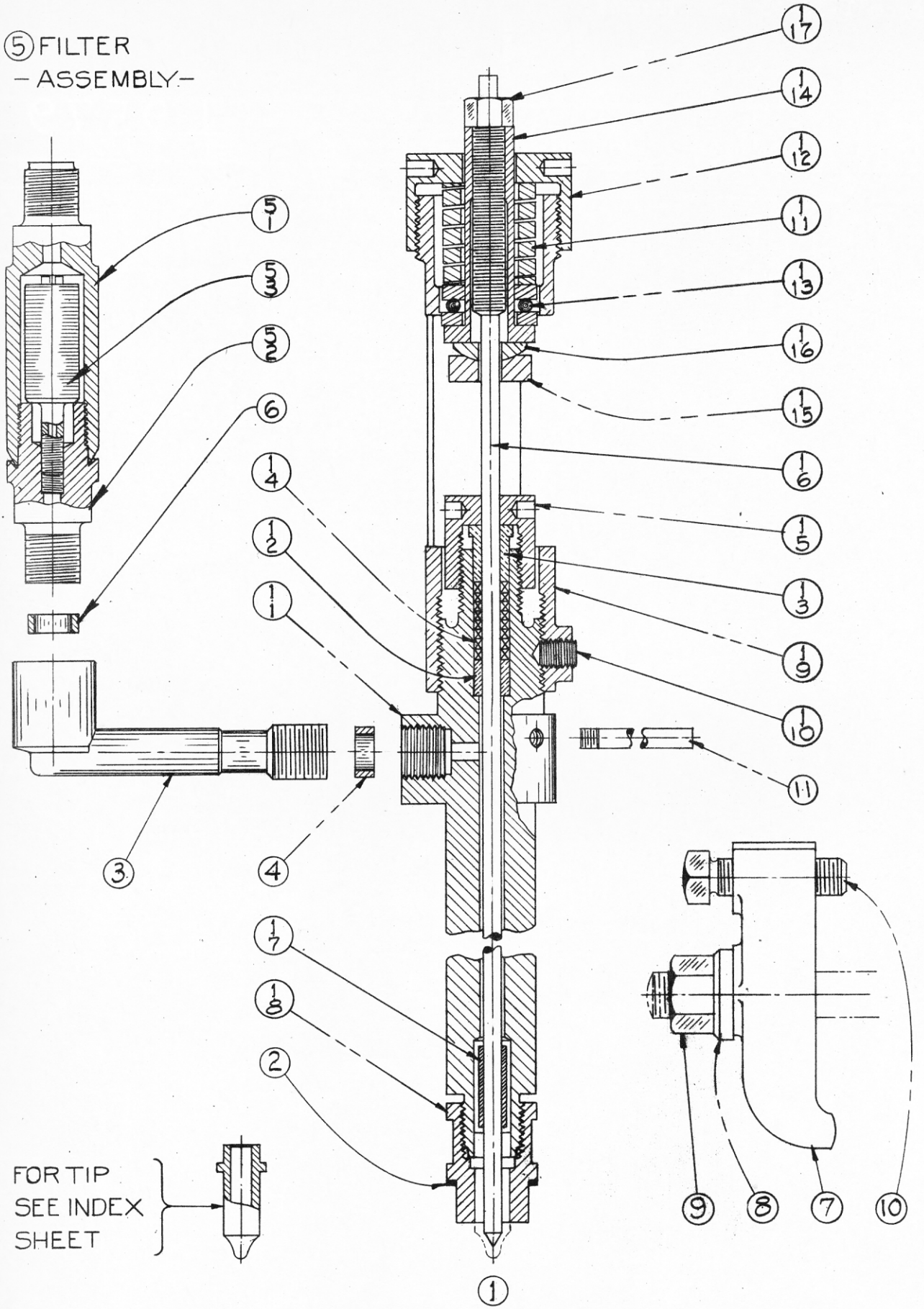

①
-SPRAY VALVE ASSEMBLY-

PLATE
No. W-1316

DO NOT ORDER PARTS BY REF. NUMBERS

EXTRA COPIES TO

TYPED BY MED DATE 5-4-43 CHKD. M.E.H. DATE 5-4-43 ISSUED BY [illegible] APRVD. [illegible]

CHANGES #2

Retyped from 1-30-43 (No Changes)

CHANGES

MASTER PARTS

ALWAYS GIVE PART NUMBER—PART NAME—ENGINE NUMBER
FOR STD. HARDWARE WITHOUT PART NUMBER GIVE DESCRIPTION AND SIZE
* INDICATES PART NOT SERVICED INDIVIDUALLY

L-9579

PLATE NO. W-1316

LINE NO.	DRWG. NO.	REF. NO.	PART NO.	NO. REQD.	PART NAME	ASSEM. DRWG. NO.
1	W-993	1	X2215	1	VALVE ASSEM. - Fuel Spray	
2	C-8293	2	860-HX	1	GASKET - Spray Valve to Cyl. Head	
3	File	3	861-GX8	1	CONNECTION - Spray Valve Fuel Filter	
4	S-928	4	861A-E	1	GASKET - Filter Connection to Spray Valve	
5	F-1981	5	X71	1	FILTER ASSEM. - Spray Valve Fuel	
6	S-928	6	861A-E	1	GASKET - Filter to Connection	
7		7	C-1825	1	CLAMP - Spray Valve	
8		8	C-519	1	WASHER - Spray Valve Clamp	
9		9		1	NUT -- 5/8-18-NF-Hex. - (St.)	
10		10		1	SETSCREW--1/2-13-NC x 1 3/4 Lg.-Sq.Hd.-Cup Pt.(St	
11		11	C-6647	1	NIPPLE - Spray Valve Drain	
12						
13						
14						
15						
16						
17						
18						
19						
20						
21						
22						
23						
24						
25						
26						
27						
28						
29						
30						
31						
32						
33						
34						
35						
36						
37						
38						
39						
40						
41						
42						
43						
44						
45						
46						
47						
48						
49						
50						

FOR OPP. HAND SEE

FOR OFF. ROT. SEE

NAME FUEL SPRAY VALVE GROUP

ORIGINALLY ISSUED FOR 6 CYL. 14 1/2 x 18 MARINE

FOR TOTAL REQUIREMENTS PER ENGINE MULTIPLY NO. REQ'D GIVEN ABOVE BY NO. REQ'D FOR GROUP GIVEN ON INDEX SHEET

PARTS LIST

ATLAS IMPERIAL DIESEL ENGINE CO.
OAKLAND, CALIF. MATTOON, ILL.

FORM 240 REV. 5-42 1M TRANS. 1M BOND

L-9579

PLATE
No. K-1604
ED:-2

DO NOT ORDER PARTS BY REF. No.

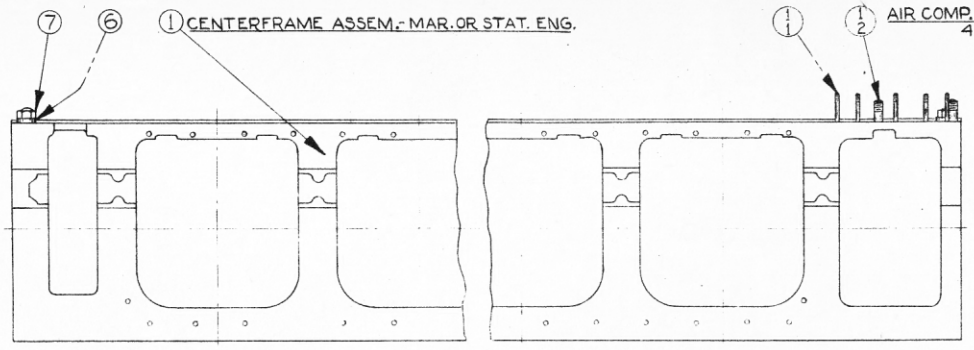

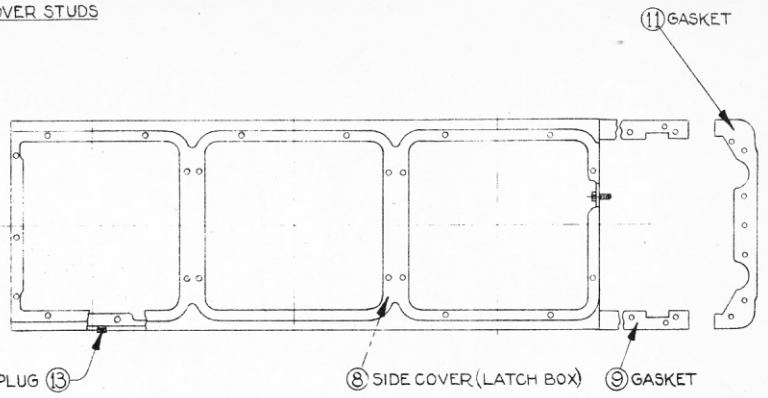

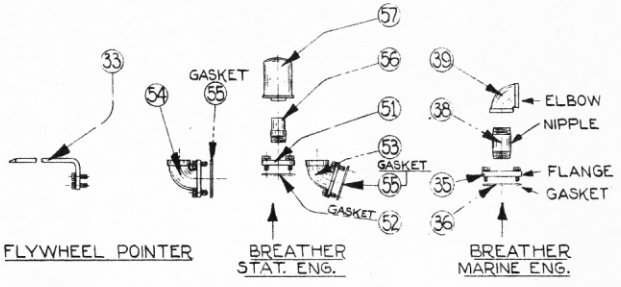

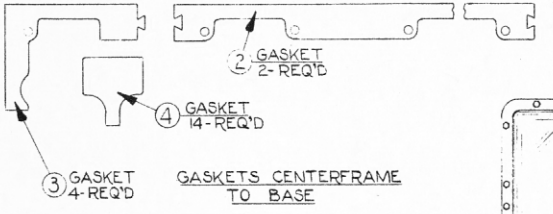

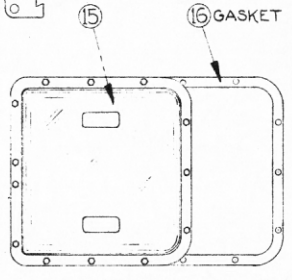

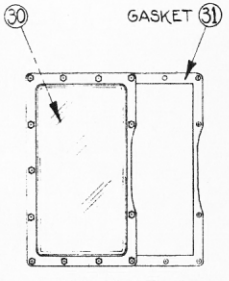

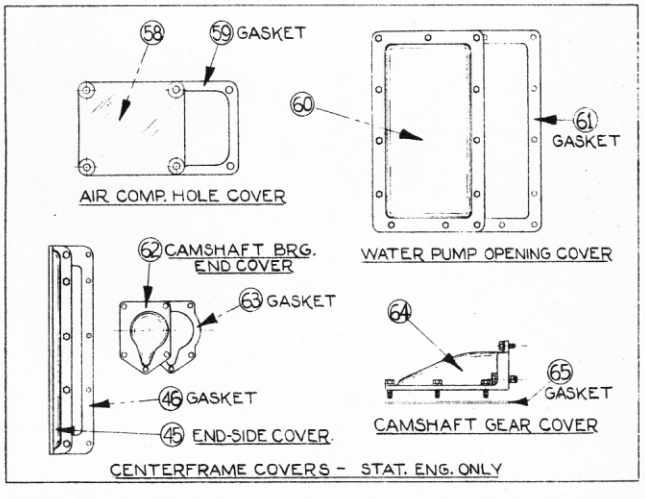

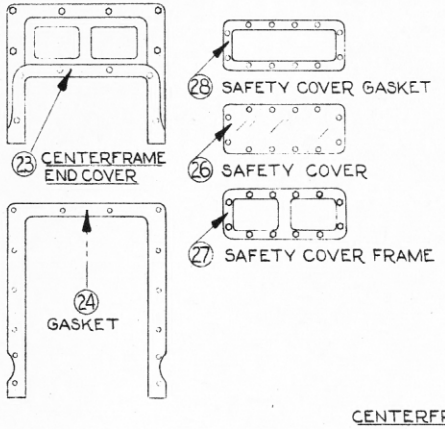

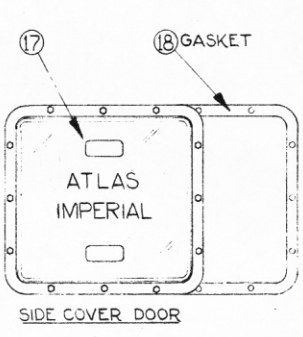

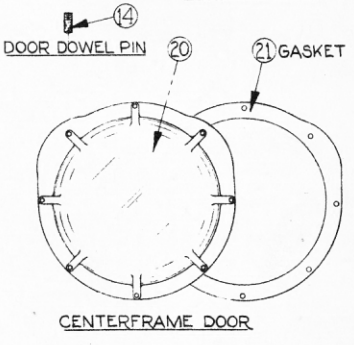

CENTERFRAME COVERS - MARINE OR STAT. ENG.

EXTRA COPIES TO

TYPED BY DJA DATE 1/30/43 CHKD DATE 2-10-43 ISSUED BY APRVD.

CHANGES #5

Retyped from 3/31/38 (No Changes)

CHANGES

ALWAYS GIVE PART NUMBER—PART NAME—ENGINE NUMBER
FOR STD. HARDWARE WITHOUT PART NUMBER GIVE DESCRIPTION AND SIZE
* INDICATES PART NOT SERVICED INDIVIDUALLY

L-9583

PLATE NO. K-1604

LINE NO.	DRWG. NO.	REF. NO.	PART NO.	NO. REQD.	PART NAME	ASSEM. DRWG. NO.
1		1	X2545	1	CENTERFRAME ASSEMBLY	
2		2	F-5461	2	GASKET - Centerframe to Base (Side)	
3		3	C-8382	4	GASKET - Centerframe to Base (End)	
4		4	C-8381	14	GASKET - Centerframe to Base (Center)	
5				28	NUT -- 1-8-NC-Hex. - - (St.)	
6				28	LOCKWASHER -- 1 SAE Reg. - - (St.)	
7		6	S-2706	4	WASHER - Base to Centerframe Stud	
8		7		4	NUT -- 1 1/2-6-NC-Hex. - - (St.)	
9		8	K-1409	2	BOX - Latch	
10		9	F-5794	2	GASKET - Latch Box to Centerframe	
11				48	CAPSCREW(Box to Centerframe)--1/2-13-NCx1 1/2Lg.-(St.)	
12				48	LOCKWASHER -- 1/2 SAE Reg. - - (St.)	
13		11	C-9358	1	GASKET - Latch Box to Latch Box	
14				7	CAPSCREW -- 1/2-13-NC x 2 Lg. - - (St.	
15				7	NUT -- 1/2-13-NC-Hex. - - (St.)	
16				7	LOCKWASHER -- 1/2 SAE Reg. - - (St.)	
17		14	S-1983	11	PIN - Dowel (Centerframe & Latch Box Door)	
18		15	W-1291	2	DOOR - Latch Box (End)	
19		16	F-5793	2	GASKET - Door to Latch Box	
20		17	W-1290	4	DOOR - Latch Box (Center)	
21		18	C-9355	4	GASKET - Door to Latch Box	
22				69	CAPSCREW -- 1/2-13-NC x 1 1/4 Lg. - - (St.)	
23				69	LOCKWASHER -- 1/2 SAE Reg. - - (St.)	
24	C-8133	20	692-V6	6	DOOR - Centerframe Round	
25	C-6424	21	692A-V6	6	GASKET - Door to Centerframe	
26				42	CAPSCREW -- 1/2-13-NC x 1 1/2 Lg. - - (St.)	
27				42	LOCKWASHER -- 1/2 SAE Reg. - - (St.)	
28		23	K-1308	2	COVER - Centerframe End (& End Brg. Cap Cover)	
29		24	F-5361	2	GASKET - Cover To Centerframe & Base	
30				14	CAPSCREW -- 1/2-13-NC x 1 1/4 Lg. - - (St.)	
31				14	LOCKWASHER -- 1/2 SAE Reg. - - (St.)	
32		26	C-9526	2	COVER - Centerframe End Cover Safety	
33		27	C-9524	2	FRAME - Safety Cover	
34		28	C-9525	2	GASKET - Frame to Cover	
35				24	CAPSCREW - 3/8-16-NC x 1 Lg. - - (St.)	
36				24	LOCKWASHER -- 3/8 SAE Reg. - - (St.)	
37		30	W-976	1	COVER - Intermediate Gear Bearing	
38		31	C-8191	1	GASKET - Cover to Centerframe	
39				13	CAPSCREW -- 1/2-13-NC x 1 1/4 Lg. - - (St.)	
40				13	LOCKWASHER -- 1/2 SAE Reg. - - (St.)	
41		33	C-9354	1	POINTER - Flywheel	
42				2	CAPSCREW -- 3/8-16-NC X 7/8 Lg. - - (St.)	
43				2	LOCKWASHER -- 3/8 SAE Reg. - - (St.)	
44	C-460	35	779	1	FLANGE - Breather	
45		36	S-2336	1	GASKET - Flange to Centerframe	
46				2	CAPSCREW -- 1/2-13-NC x 1 1/2 Lg. - - (St.)	
47				2	LOCKWASHER -- 1/2 SAE Reg. - - (St.)	
48		38		1	NIPPLE -- 2 x 4 Lg. - - (W.I.)	
49		39		1	ELBOW -- 2 Std. - - (M.I.)	
50						

FOR OPP. HAND SEE L-9584

FOR OPP. ROT. SEE

NAME CENTERFRAME & COVERS GROUP

ORIGINALLY ISSUED FOR 6 CYL. 14 1/2 x 18 MAR.-R.H.

FOR TOTAL REQUIREMENTS PER ENGINE MULTIPLY NO. REQ'D GIVEN ABOVE BY NO. REQ'D FOR GROUP GIVEN ON INDEX SHEET

PARTS LIST

ATLAS IMPERIAL DIESEL ENGINE CO.
OAKLAND, CALIF. MATTOON, ILL.

FORM 240 REV. 5-42 1M TRANS. 1M BOND

L-9583

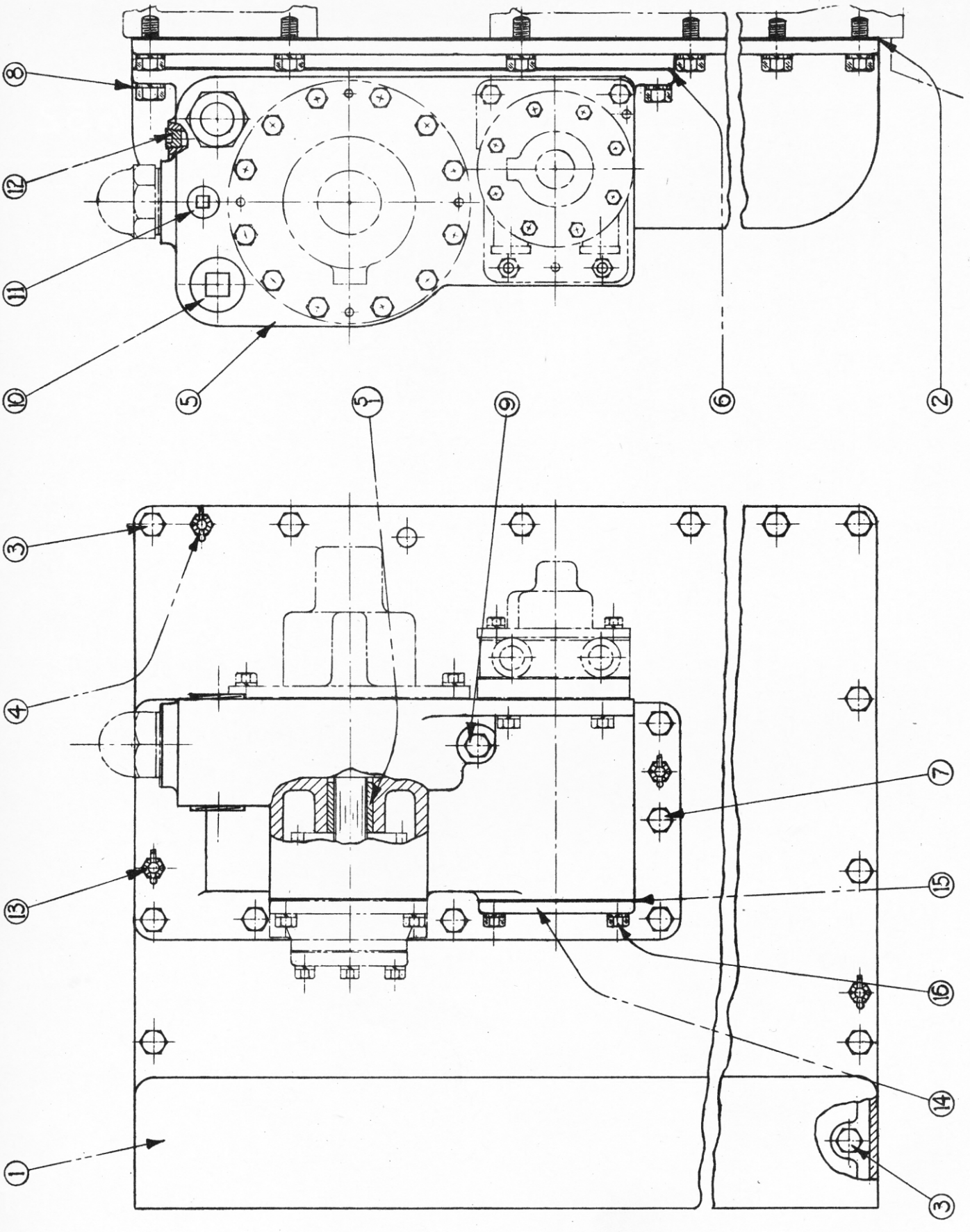

PLATE
No. W-1646

DO NOT ORDER PARTS BY REF. NUMBERS

EXTRA COPIES TO

TYPED BY DJA DATE 2/1/43 CHKD. M.E. DATE 2-10-43 ISSUED BY [illegible] APRVD. [illegible]

CHANGES #2

Retyped from 3/24/38 (No Changes)

CHANGES

ALWAYS GIVE PART NUMBER—PART NAME—ENGINE NUMBER
FOR STD. HARDWARE WITHOUT PART NUMBER GIVE DESCRIPTION AND SIZE
* INDICATES PART NOT SERVICED INDIVIDUALLY

L-9652

PLATE NO. W-1646

LINE NO.	DRWG. NO.	REF. NO.	PART NO.	NO. REQD.	PART NAME	ASSEM. DRWG. NO.
1		1	K-1418	1	PLATE - Pump Drive Housing Adaptor	
2		2	F-5787	1	GASKET - Plate to Centerframe	
3		3		11	CAPSCREW -- 1/2-13-NC x 1 1/4 Lg. - - (St.)	
4		3		11	LOCKWASHER -- 1/2 SAE Reg. - - (St.)	
5	C-7950	4	C-7950L1 1/2	2	PIN - Plate to Centerframe Dowel	
6		4		2	CASTLE NUT -- 3/8-24-NF-Hex. - - (St.)	
7		4		2	COTTER PIN -- 3/32 x 3/4 Lg. - - (St.)	
8		5	X2531	1	HOUSING ASSEMBLY - Pump Drive	
9		6	C-8192	1	GASKET - Housing to Adaptor Plate	
10		7		5	CAPSCREW -- 1/2-13-NC x 1 1/4 Lg. - - (St.)	
11		8		2	CAPSCREW -- 1/2-13-NC x 2 Lg. - - (St.)	
12		9		1	CAPSCREW -- 1/2-13-NC x 6 1/2 Lg. - - (St.)	
13				8	LOCKWASHER -- 1/2 SAE Reg. - - (St.)	
14		10		1	PIPE PLUG -- 1 1/4 Std. - - C't's'k. Head -(C.I.)	
15		11		1	PIPE PLUG -- 3/4 Std. - C't's'k. Head -(C.I.)	
16		12		1	PIPE PLUG (DRIVE HOUSING) -- 3/8 Std. - C't's'k.	
17					Hd. (C.I.	
18	C-7950	13	C-7950L1 3/8	2	PIN - Housing to Adaptor Plate Dowel	
19		13		2	CASTLE NUT -- 3/8-24-NF-Hex. - - (St.)	
20		13		2	COTTER PIN -- 3/32 x 3/4 Lg. - - (St.)	
21		14	C-8151	1	COVER - Pump Drive Housing - (Fuel Pump Compart.)	
22		15	C-8171	1	GASKET - Cover to Drive Housing	
23		16		4	CAPSCREW -- 3/8-16-NC x 1 Lg. - - (St.)	
24		16		4	LOCKWASHER -- 3/8 SAE Reg. - - (St.)	
25						
26						
27						
28						
29						
30						
31						
32						
33						
34						
35						
36						
37						
38						
39						
40						
41						
42						
43						
44						
45						
46						
47						
48						
49						
50						

FOR OPP. HAND SEE L-9653

FOR OPP. ROT. SEE

NAME LUBE & FUEL OIL PUMP DRIVE HOUSING & COVERS GROUP

ORIGINALLY ISSUED FOR 6 CYL. 14 1/2 x 18 MAR.-(R.H.)

FOR TOTAL REQUIREMENTS PER ENGINE MULTIPLY NO. REQ'D GIVEN ABOVE BY NO. REQ'D FOR GROUP GIVEN ON INDEX SHEET

PARTS LIST

ATLAS IMPERIAL DIESEL ENGINE CO.
OAKLAND, CALIF. MATTOON, ILL.

FORM 240 REV. 5-42 1M TRANS. 1M BOND

L-9652

PLATE
No. K-1605

DO NOT ORDER PARTS BY REF. NUMBERS

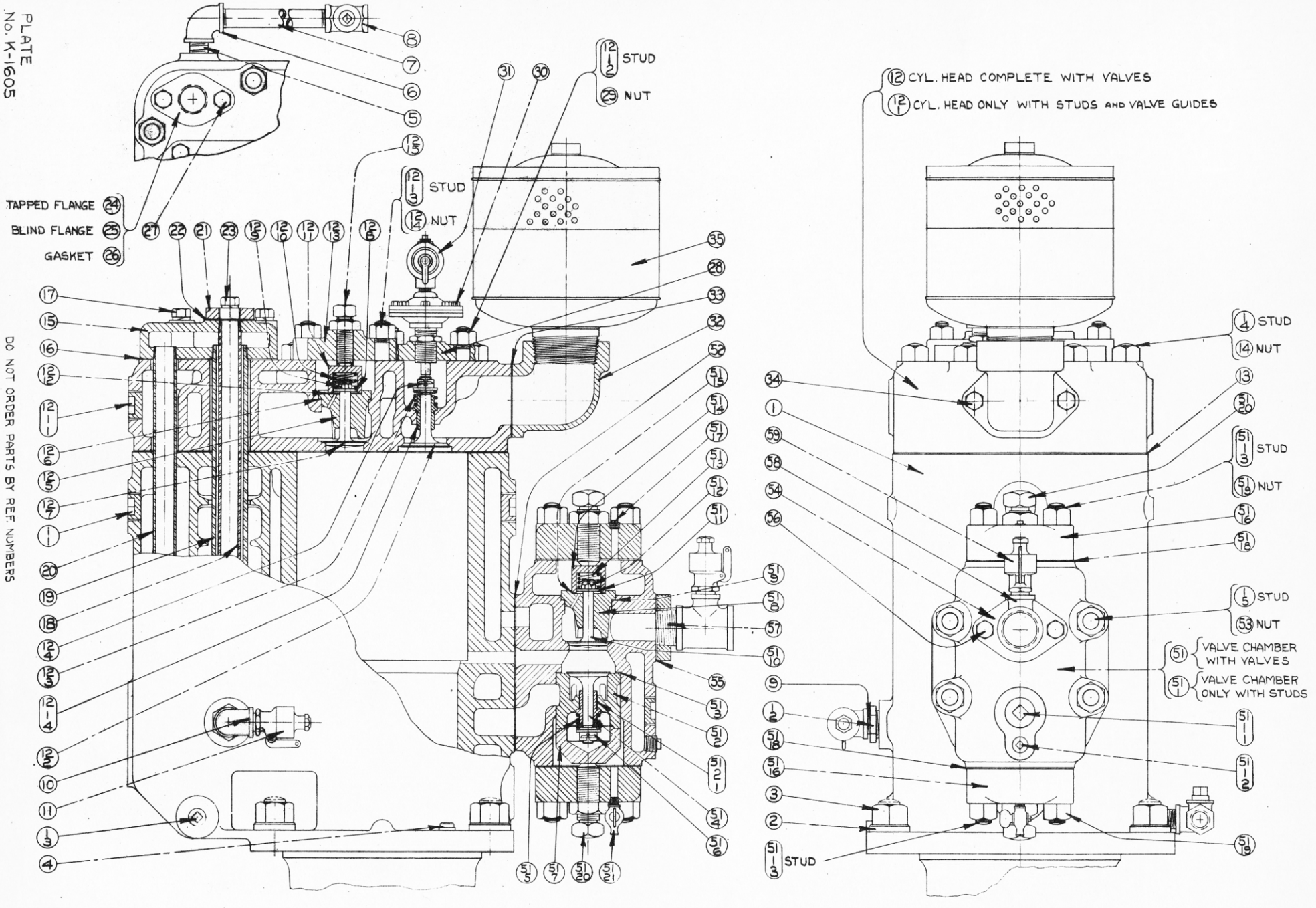

EXTRA COPIES TO

TYPED BY DJA DATE 2/1/43 CHKD [illegible] DATE 2-10-43 ISSUED BY [illegible] APRVD.

CHANGES #4

Retyped from 3/28/38 (No Changes)

CHANGES

ALWAYS GIVE PART NUMBER—PART NAME—ENGINE NUMBER
FOR STD. HARDWARE WITHOUT PART NUMBER GIVE DESCRIPTION AND SIZE
* INDICATES PART NOT SERVICED INDIVIDUALLY

L-9655

PLATE NO. K-1605

LINE NO.	DRWG. NO.	REF. NO.	PART NO.	NO. REQD.	PART NAME	ASSEM. DRWG. NO.
1		51	X2536	1	CHAMBER ASSEMBLY - Air Comp. Valve (#2 Stage)	
2		52	F-5760	1	GASKET - Valve Chamber to Cylinder	
3		53		4	NUT -- 3/4-10-NC-Hex. - - (St.)	
4		54	C-9522	1	FLANGE - Valve Chamber Discharge Pipe	
5		55	C-9523	1	GASKET - Flange to Valve Chamber	
6		56		2	CAPSCREW -- 5/8-11-NC x 2 1/2 Lg. - - (St.)	
7		56		2	LOCKWASHER -- 5/8 SAE Reg. - - (St.)	
8		57		1	CLOSE NIPPLE -- 1 1/4 Std. - - (St.)	
9		58		1	TEE -- 1½ x 1¼ x ½ Std. Reducing - (M.I.)	
10	C-9975	59	C-9975-P1/2	1	VALVE - Second Stage Safety	
11						
12						
13						
14						
15						
16						
17						
18						
19						
20						
21						
22						
23						
24						
25						
26						
27						
28						
29						
30						
31						
32						
33						
34						
35						
36						
37						
38						
39						
40						
41						
42						
43						
44						
45						
46						
47						
48						
49						
50						

FOR OPP. HAND SEE

FOR OPP. ROT. SEE

NAME AIR COMPRESSOR SECOND STAGE VALVE CHAMBER GROUP

ORIGINALLY ISSUED FOR 6 CYL. 14 1/2 x 18 MARINE

FOR TOTAL REQUIREMENTS PER ENGINE MULTIPLY NO. REQ'D GIVEN ABOVE BY NO. REQ'D FOR GROUP GIVEN ON INDEX SHEET

PARTS LIST

ATLAS IMPERIAL DIESEL ENGINE CO.
OAKLAND, CALIF. MATTOON, ILL.

FORM 240 REV. 5-42 1M TRANS. 1M BOND

L-9655

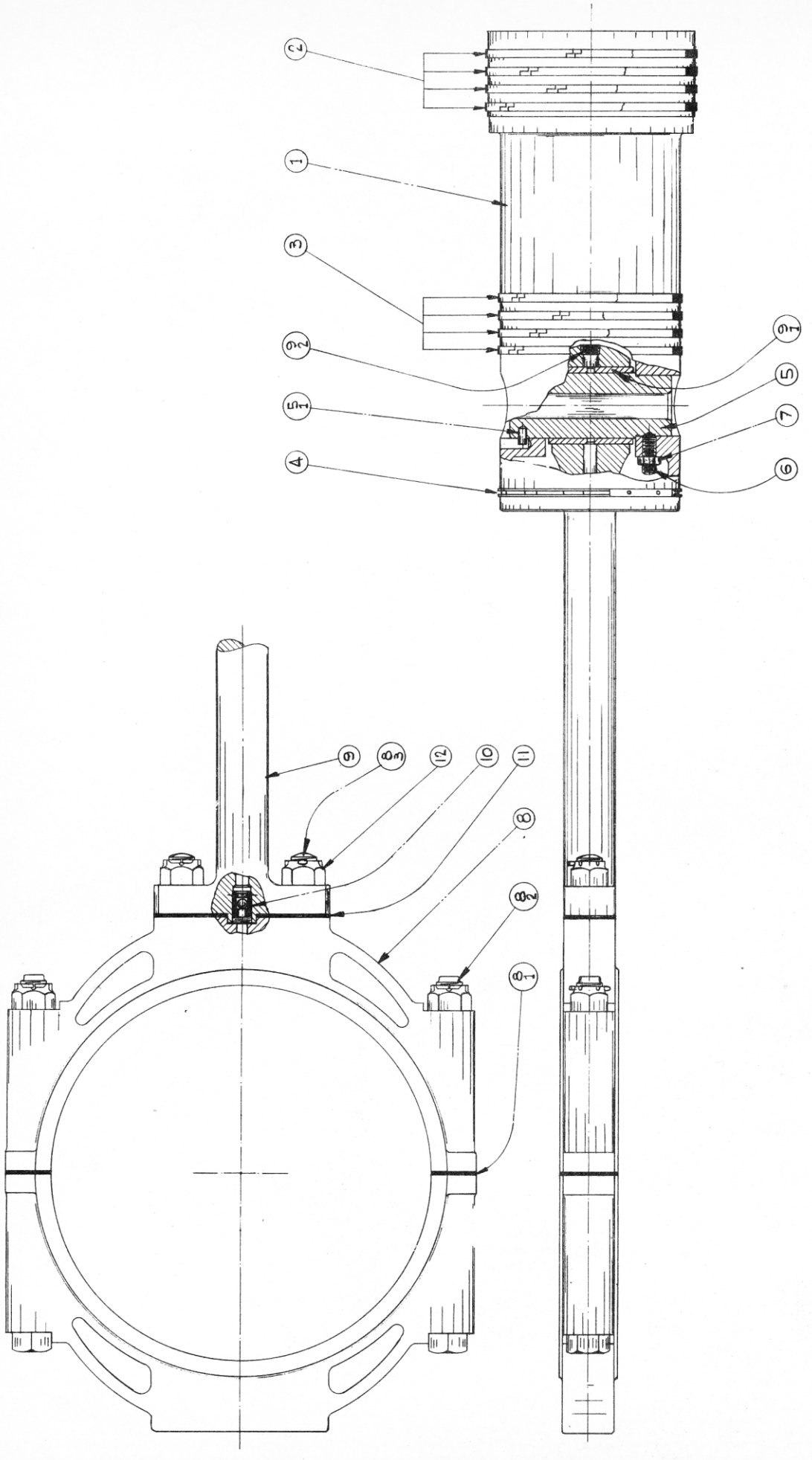

PLATE
No. K-1606

EXTRA COPIES TO

TYPED BY DJA DATE 2/1/43 CHKD RE DATE 2-10-43 ISSUED BY APRVD.

CHANGES #1 Retyped from 3/29/38 (No Changes)

CHANGES

L-9656

ALWAYS GIVE PART NUMBER—PART NAME—ENGINE NUMBER
FOR STD. HARDWARE WITHOUT PART NUMBER GIVE DESCRIPTION AND SIZE
* INDICATES PART NOT SERVICED INDIVIDUALLY

PLATE NO. K-1606

LINE NO.	DRWG. NO.	REF. NO.	PART NO.	NO. REQD.	PART NAME	ASSEM. DRWG. NO.
1		1	W-1261	1	PISTON - Air Compressor	
2	C-2154	2	C-2154L8	4	RING - Piston (#1 Stage)	
3	C-2154	3	C-2154L7	4	RING - Piston (#2 Stage)	
4	C-9074	4	C-9074-P7	1	RING - Piston (Oil Control)	
5		5	X2539	1	PIN ASSEMBLY - Piston	
6		6		1	SETSCREW -- ½-13-NC x 1½ Lg. - Headless Cup Pt. - (St.)	
7		7		1	HALF NUT -- 1/2-13-NC-Hex. - - (St.)	
8	W-1262	8	X2505	1	STRAP ASSEMBLY - Air Compressor Eccentric	
9	F-5741	9	X2510	1	ROD ASSEMBLY - Air Comp. Connecting	
10	C-5307	10	G632-E	1	VALVE ASSEMBLY - Ball Check	
11	C-9243	11	C-9243-A	1	SHIM - Rod to Eccentric Strap - (1/16)	
12	C-9243	11	C-9243-B	2	SHIM - Rod to Eccentric Strap - (1/32)	
13	C-9243	11	C-9243-D	5	SHIM-- Rod to Eccentric Strap - (.010)	
14	C-9243	11	C-9243-E	4	SHIM - Rod to Eccentric Strap - (.003)	
15		12		2	CASTLE NUT -- 1-14-NF-Hex. - - (St.)	
16		12		2	COTTER PIN -- 1/8 x 1 3/4 Lg. - - (St.)	
17						
18						
19						
20						
21						
22						
23						
24						
25						
26						
27						
28						
29						
30						
31						
32						
33						
34						
35						
36						
37						
38						
39						
40						
41						
42						
43						
44						
45						
46						
47						
48						
49						
50						

FOR OPP. HAND SEE

FOR OPP. ROT. SEE

FORM 240 REV. 5-42 1M TRANS. 1M BOND

NAME AIR COMPRESSOR PISTON, ROD & ECCENTRIC STRAP GROUP
(48 CU. FT. AT 300 R.P.M.) ORIGINALLY ISSUED FOR 6 CYL. 14 1/2 x 18 MARINE

FOR TOTAL REQUIREMENTS PER ENGINE MULTIPLY NO. REQ'D GIVEN ABOVE BY NO. REQ'D FOR GROUP GIVEN ON INDEX SHEET

PARTS LIST

ATLAS IMPERIAL DIESEL ENGINE CO.
OAKLAND, CALIF. MATTOON, ILL.

L-9656

PLATE
No. K-1594

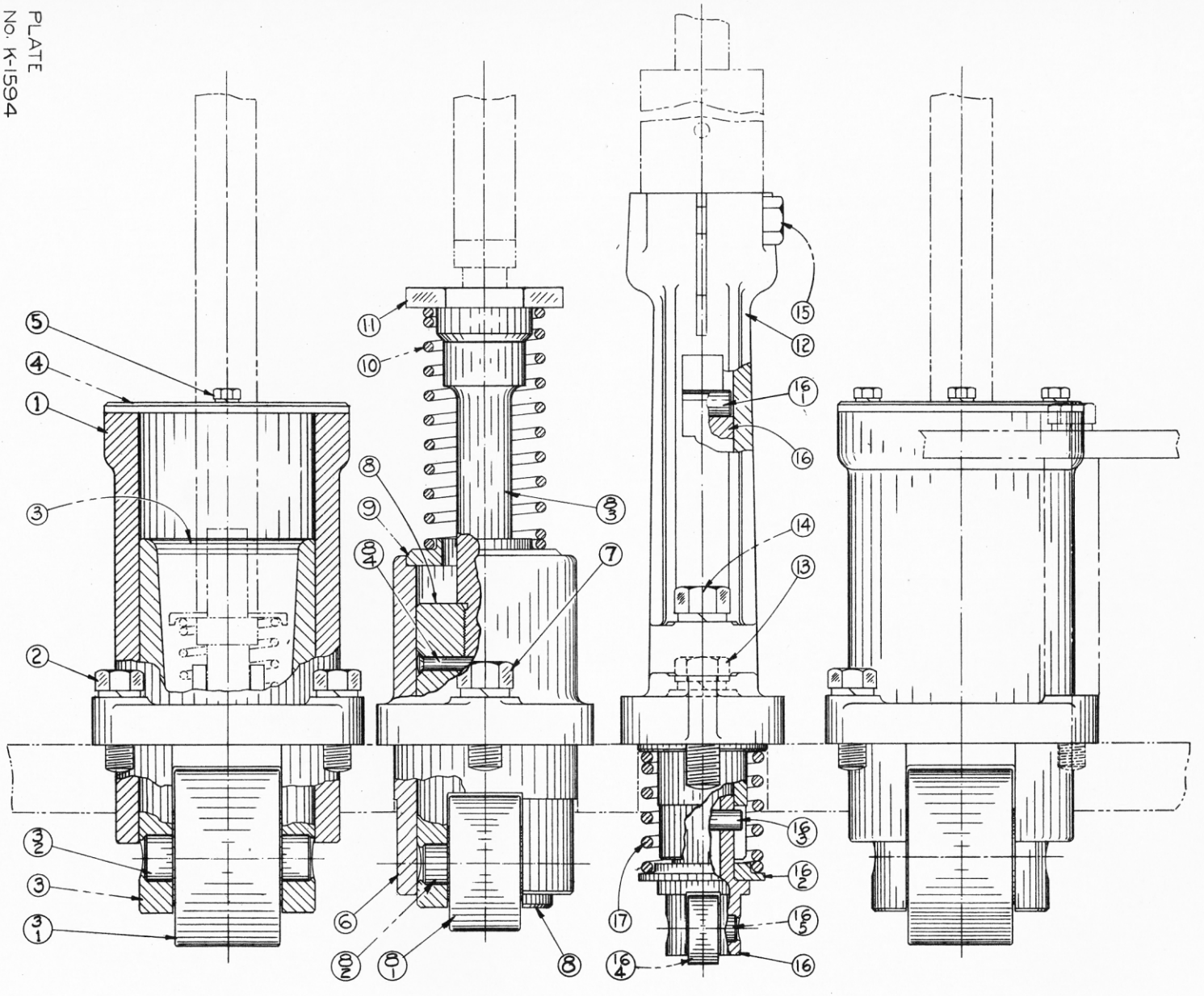

INTAKE AIR FUEL EXHAUST

PART No's SAME AS INTAKE

EXTRA COPIES TO

TYPED BY DATE 8/1/43 CHKD. DATE 2-10-43 BY APRVD.

Retyped from 4/1/38 (No Changes)

CHANGES #3

CHANGES

L-9660

ALWAYS GIVE PART NUMBER—PART NAME—ENGINE NUMBER
FOR STD. HARDWARE WITHOUT PART NUMBER GIVE DESCRIPTION AND SIZE
* INDICATES PART NOT SERVICED INDIVIDUALLY

PLATE NO. K-1594

LINE NO.	DRWG. NO.	REF. NO.	PART NO.	NO. REQD.	PART NAME	ASSEM. DRWG. NO.
1		1	W-1271	12	GUIDE - Inlet & Exhaust Valve Lifter	
2		2		38	CAPSCREW -- 1/2-13-NC x 1 1/2 Lg. - - (St.)	
3		2		38	LOCKWASHER -- 1/2 SAE Reg. - - (St.)	
4	C-9335	3	X2543	12	LIFTER ASSEMBLY - Inlet & Exhaust Valve	
5		4	C-9313	12	COVER - In. & Ex. Valve Lifter Guide Top	
6		5		36	CAPSCREW -- 1/4-20-NC x 5/8 Lg. - - (St.)	
7		5		36	LOCKWASHER -- 1/4 SAE Reg. - - (St.)	
8						
9		6	F-5751	6	GUIDE - Air Starting Valve Lifter	
10		7		12	CAPSCREW -- 5/8-11-NC x 1 3/4 Lg. - - (St.)	
11		7		12	LOCKWASHER -- 5/8 SAE Reg. - - (St.)	
12	F-5783	8	X2542	6	LIFTER ASSEMBLY - Air Starting Valve	
13		9	C-9308	6	SEAT - Air Starting Valve Lifter Spring	
14		10	C-8386	6	SPRING - Air Starting Valve Lifter	
15		11	C-9309	6	NUT - Air Start. Valve Lifter Spring Retainer	
16						
17		12	W-1282	6	GUIDE - Fuel Spray Valve Lifter	
18		13		6	CAPSCREW -- 5/8-11-NC x 2 Lg. - - (St.)	
19		14		6	CAPSCREW -- 5/8-11-NC x 3 Lg. - - (St.)	
20				12	LOCKWASHER -- 5/8 SAE Reg. - - (St.)	
21		15		6	CAPSCREW (CLAMP) -- 1/2-13-NC x 2 Lg. - - (St.)	
22	F-5786	16	X2551	6	LIFTER ASSEMBLY - Fuel Spray Valve	
23		17	C-9333	6	SPRING - Fuel Spray Valve Lifter	
24						
25						
26						
27						
28						
29						
30						
31						
32						
33						
34						
35						
36						
37						
38						
39						
40						
41						
42						
43						
44						
45						
46						
47						
48						
49						
50						

FOR OPP. HAND SEE

FOR OPP. ROT. SEE

NAME VALVE LIFTER & GUIDE GROUP

ORIGINALLY ISSUED FOR 6 CYL. 14 1/2 x 18 MARINE

FOR TOTAL REQUIREMENTS PER ENGINE MULTIPLY NO. REQ'D GIVEN ABOVE BY NO. REQ'D FOR GROUP GIVEN ON INDEX SHEET

PARTS LIST

ATLAS IMPERIAL DIESEL ENGINE CO.
OAKLAND, CALIF. MATTOON, ILL.

FORM 240 REV. 5-42 1M TRANS. 1M BOND

L-9660

PLATE
No. K-1587 - - (ED. 2).

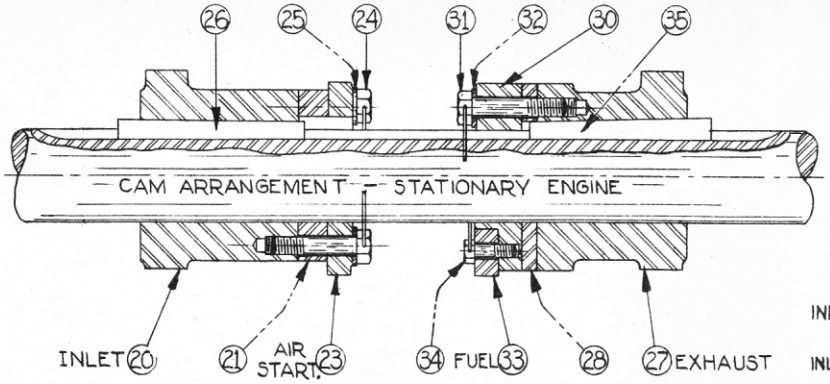

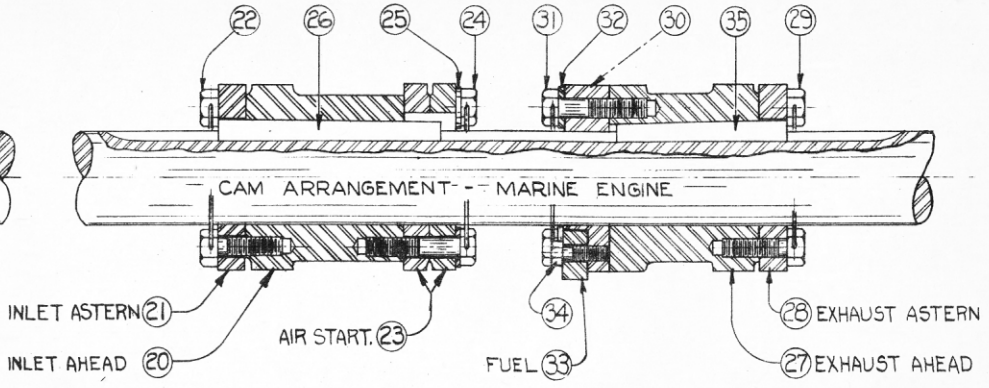

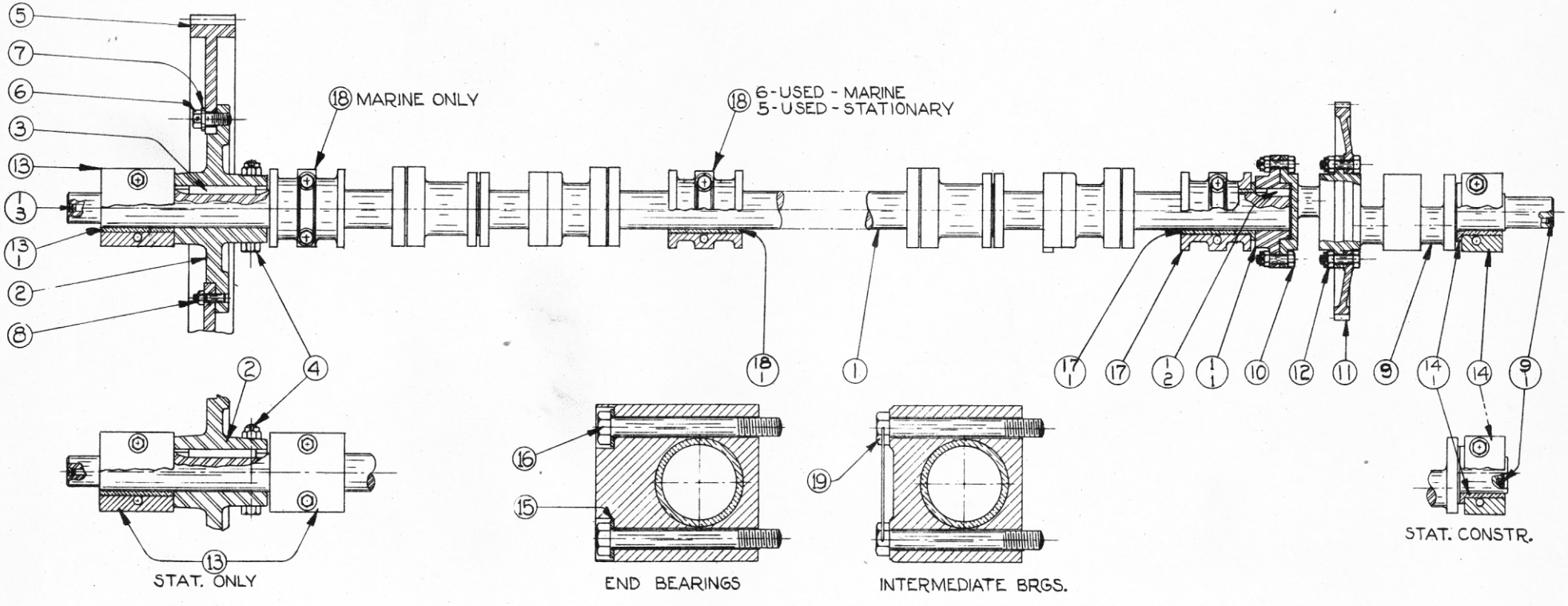

EXTRA COPIES TO

TYPED BY DJA DATE 2/1/43 CHKD. DATE 2-10-43 ISSUED BY APRVD.

CHANGES #3 Retyped from 4/1/38 (No Changes)

CHANGES

ALWAYS GIVE PART NUMBER—PART NAME—ENGINE NUMBER
FOR STD. HARDWARE WITHOUT PART NUMBER GIVE DESCRIPTION AND SIZE
* INDICATES PART NOT SERVICED INDIVIDUALLY

L-9661

PLATE NO. K-1587

LINE NO.	DRWG. NO.	REF. NO.	PART NO.	NO. REQD.	PART NAME	ASSEM. DRWG. NO. K-1435-R.H.--K-1434-L.H.
1	F-5354	1	X2179	1	CAMSHAFT ASSEMBLY	
2		2	F-5313	1	HUB - Camshaft Gear	
3	C-6710	3	C-6710L4 1/2	1	KEY - Hub to Camshaft	
4	C-2512	4	C-2512L5 1/2	2	BOLT - Camshaft Gear Hub Clamp	
5		4		2	CASTLE NUT -- 3/4-16-NF-Hex. - - (St.)	
6		4		2	COTTER PIN -- 1/8 x 1 1/4 Lg. - - (St.)	
7		5	W-1469	1	GEAR - Camshaft Drive	
8	C-2412	6	C-2412L1 7/8	6	CAPSCREW - Gear to Hub	
9		7	C-3238	6	WASHER - Gear to Hub Capscrew	
10	C-6633	8	C-6633L2	1	PIN - Gear to Hub Dowel	
11		8		1	NUT -- 1/2-13-NC-Hex. - - (St.)	
12				1	WIRE (CAPSCREW & DOWEL PIN)--#16 Ga.x39 Lg.-(St.)	
13		9	X2553	1	CRANK ASSEMBLY - H.P. Fuel Pump	
14	C-2610	10	C-2610L2	6	BOLT - Crank to Camshaft Coupling	
15		10		6	CASTLE NUT -- 5/8-18-NF-HEX. - - (St.)	
16				1	WIRE -- #16 Ga. x 23 Lg. - - (St.)	
17		11	F-5325	1	GEAR - Lube Oil & L.P. Fuel Pump Drive	
18	C-2610	12	C-2610L2	6	BOLT - Gear to Fuel Pump Crank	
19		12		6	CASTLE NUT -- 5/8-18-NF-Hex. - - (St.)	
20				1	WIRE -- #16 Ga. x 23 Lg. - - (St.)	
21						
22	C-8189	13	X2189	1	BEARING ASSEMBLY - Camshaft (Aft End)	
23	C-8190	14	X2190	1	BEARING ASSEMBLY - Camshaft (Fwd. End)	
24		15	C-4921	4	WASHER - Camshaft End Bearing to Centerframe Bolt	
25		16		4	CAPSCREW -- 5/8-11-NC x 5 3/4 Lg. - - (St.)	
26	C-9238	17	X2500	1	BEARING ASSEMBLY - Camshaft (Int. Thrust)	
27	C-9239	18	X2503	6	BEARING ASSEMBLY - Camshaft (Intermediate)	
28	C-2410	19	C-2410L5 1/4	14	CAPSCREW - Camshaft Bearing to Centerframe	
29				7	WIRE -- #16 Ga. x 10 Lg. - - (St.)	
30						
31						
32						
33						
34						
35						
36						
37						
38						
39						
40						
41						
42						
43						
44						
45						
46						
47						
48						
49						
50						

L-9661

FOR OPP. HAND SEE

FOR OPP. ROT. SEE

NAME CAMSHAFT & FUEL PUMP CRANK GROUP

ORIGINALLY ISSUED FOR 6 CYL. 14 1/2 x 18 MARINE

FOR TOTAL REQUIREMENTS PER ENGINE MULTIPLY NO. REQ'D GIVEN ABOVE BY NO. REQ'D FOR GROUP GIVEN ON INDEX SHEET

FORM 240 REV. 5-42 1M TRANS. 1M BOND

PARTS LIST

ATLAS IMPERIAL DIESEL ENGINE CO.
OAKLAND, CALIF. MATTOON, ILL.

PLATE
No. K-1587--(ED.2)

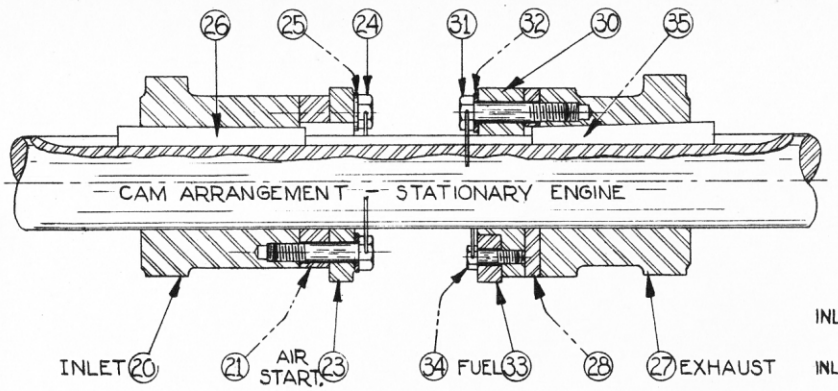

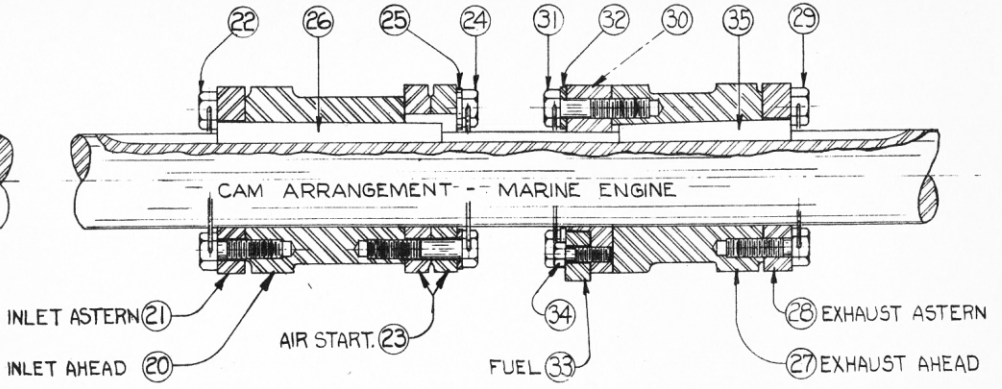

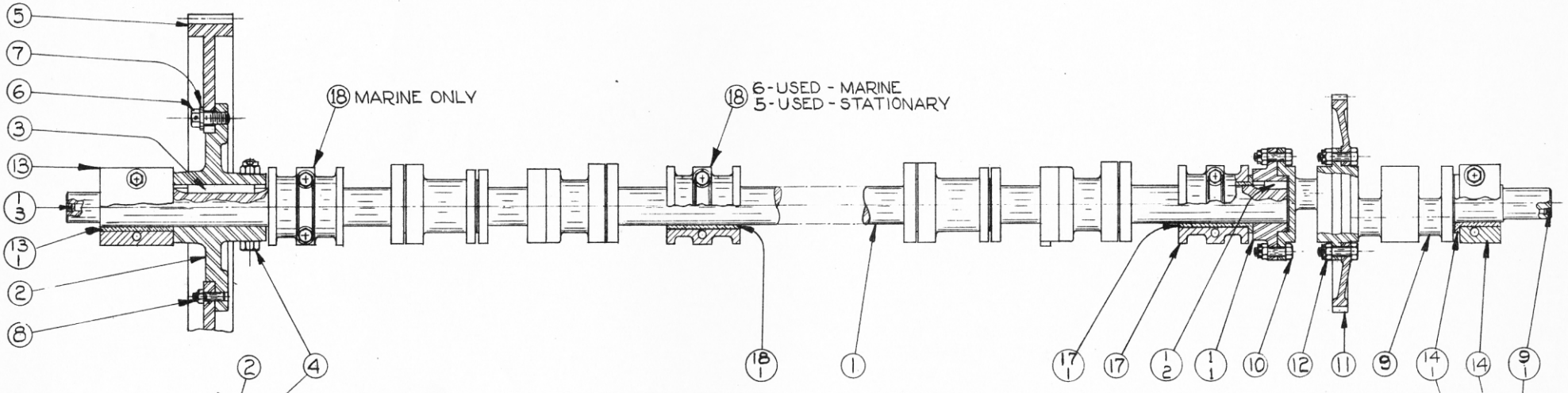

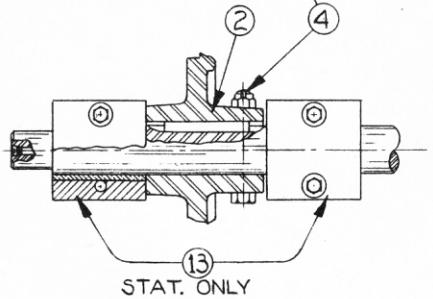

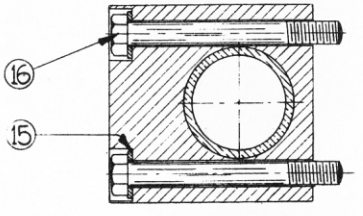

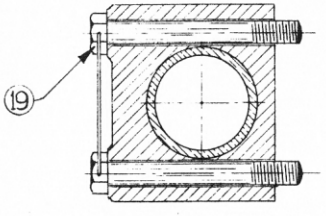

EXTRA COPIES TO

TYPED BY MED DATE 4/4/38 ISSUED BY DATE CHKD. APRVD.

CHANGES #1 6/2/38 Lines 7 & 17 Part Nos. Were 881A-E

CHANGES

MASTER CATALOG

L-9663

ALWAYS GIVE PART NUMBER—PART NAME—ENGINE NUMBER
FOR STD. HARDWARE WITHOUT PART NUMBER GIVE DESCRIPTION AND SIZE
* INDICATES PART NOT SERVICED INDIVIDUALLY

PLATE NO. K-1587

LINE NO.	DRWG. NO.	REF. NO.	*	PART NO.	NO. REQD.	PART NAME	ASSEM. DRWG. NO.
1		20		F-5763	1	Cam - Inlet - - (Ahead)	
2		21		F-5758	1	Cam - Inlet - - (Astern)	
3	C-2408	22		C-2408L1 1/8	4	Capscrew - Astern Cam to Ahead Cam	
4					1	Wire -- #16 Ga. x 12 Lg. - - (Steel)	
5		23		F-5759	2	Cam - Air Starting	
6	C-2408	24		C-2408L2 1/4	4	Capscrew - Air Starting Cam to Inlet Cam	
7	3386	25		1327E-FXC4	4	Washer - Air Starting Cam Capscrew	
8					1	Wire -- #16 Ga. x 12 Lg. - - (Steel)	
9	S-3234	26		5386	1	Key - Inlet & Air Starting Cam to Camshaft	
10							
11		27		F-5764	1	Cam - Exhaust - - (Ahead)	
12		28		F-5758	1	Cam - Exhaust - - (Astern)	
13	C-2408	29		C-2408L1 1/8	4	Capscrew - Astern Cam to Ahead Cam	
14					1	Wire -- #16 Ga. x 12 Lg. - - (Steel)	
15	C-3644	30		881-HX	1	Disc - Fuel Cam	
16	C-2408	31		C-2408L2	4	Capscrew - Disc to Exhaust Cam	
17	3386	32		1327E-FXC4	4	Washer - Fuel Cam Capscrew	
18	C-3645	33		880-HX	1	Toe - Fuel Cam	
19	C-2406	34		C-2406L1 1/4	1	Capscrew - Toe to Fuel Cam Disc	
20					1	Wire -- #16 Ga. x 14 Lg. - - (Steel)	
21	S-3234	35		5386	1	Key - Exhaust & Fuel Cam to Camshaft	
22							
23							
24							
25							
26							
27							
28							
29							
30							
31							
32							
33							
34							
35							
36							
37							
38							
39							
40							
41							
42							
43							
44							
45							
46							
47							
48							
49							
50							

L-9663

FOR OPP. HAND SEE

NAME CAM GROUP (OUTBOARD ROTATION)

ORIGINALLY ISSUED FOR 6 CYL. 14 1/2 x 18 MARINE

FOR OPP. ROT. SEE L-9662

FOR TOTAL REQUIREMENTS PER ENGINE MULTIPLY NO. REQ'D GIVEN ABOVE BY NO. REQ'D FOR THIS GROUP GIVEN ON INDEX SHEET

PARTS LIST

ATLAS IMPERIAL DIESEL ENGINE CO.
MATTOON, ILL.

FORM NO. 241-3M-10-37

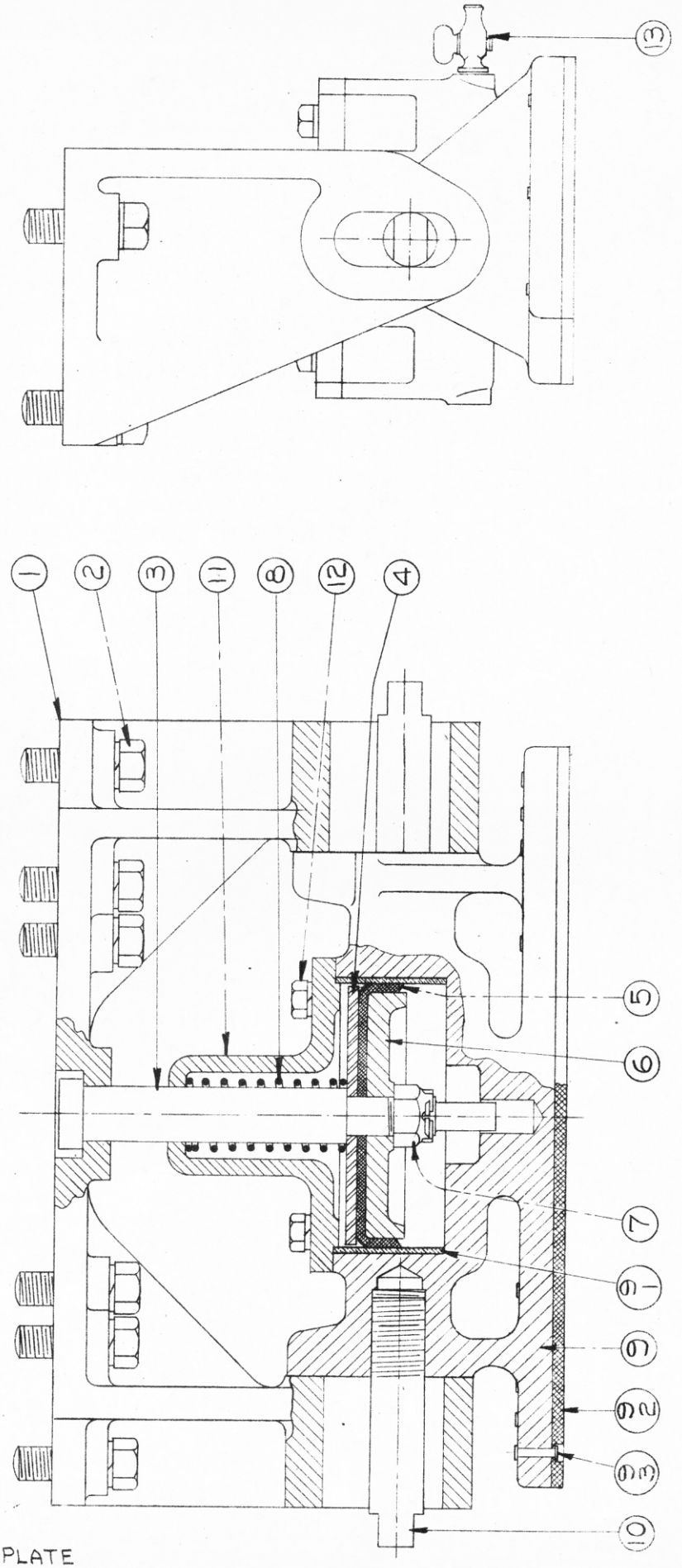

PLATE
No. W-1311

EXTRA COPIES TO

TYPED DJA DATE 2/1/43 CHKD. DATE 2-10-43 BY APRVD.

CHANGES #1

Retyped from 4/4/38 (No Changes)

CHANGES

L-9664

ALWAYS GIVE PART NUMBER—PART NAME—ENGINE NUMBER
FOR STD. HARDWARE WITHOUT PART NUMBER GIVE DESCRIPTION AND SIZE
* INDICATES PART NOT SERVICED INDIVIDUALLY

PLATE NO. W-1311

LINE NO.	DRWG. NO.	REF. NO.	PART NO.	NO. REQD.	PART NAME	ASSEM. DRWG. NO.
1		1	W-1265	1	POST - Flywheel Air Brake	
2		2		6	CAPSCREW -- 3/4-10-NC x 2 1/4 Lg. - - (St.)	
3		2		6	LOCKWASHER -- 3/4 SAE Reg. - - (St.)	
4		3	C-9337	1	ROD - Flywheel Air Brake Piston	
5		4	C-9336	1	WASHER - Air Brake Piston Cup-Leather	
6		5	C-9314	1	CUP-LEATHER - Air Brake Piston	
7		6	C-9240	1	FOLLOWER - Air Brake Piston Cup-Leather	
8		7		1	CASTLE NUT -- 7/8-14-NF-Hex. - - (St.)	
9		7		1	COTTER PIN -- 1/8 x 1 1/2 Lg. - - (St.)	
10		8	C-9318	1	SPRING - Air Brake Piston Rod	
11	C-9343	9	X2552	1	CYLINDER ASSEMBLY - Flywheel Air Brake	
12		10	C-9359	2	PIN - Air Brake Cylinder Guide	
13		11	F-5740	1	COVER - Air Brake Cylinder End	
14		12		4	CAPSCREW -- 1/2-13-NC x 1 1/4 Lg. - - (St.)	
15		12		4	LOCKWASHER -- 1/2 SAE Reg. - - (St.)	
16	C-9045	13	C-9045-P 1/8	1	COCK - Cylinder Drain	
17						
18						
19						
20						
21						
22						
23						
24						
25						
26						
27						
28						
29						
30						
31						
32						
33						
34						
35						
36						
37						
38						
39						
40						
41						
42						
43						
44						
45						
46						
47						
48						
49						
50						

FOR OPP. HAND SEE

FOR OPP. ROT. SEE

NAME FLYWHEEL AIR BRAKE GROUP

ORIGINALLY ISSUED FOR 6 CYL. 14 1/2 x 18 MARINE

FOR TOTAL REQUIREMENTS PER ENGINE MULTIPLY NO. REQ'D GIVEN ABOVE BY NO. REQ'D FOR GROUP GIVEN ON INDEX SHEET

PARTS LIST

ATLAS IMPERIAL DIESEL ENGINE CO.
OAKLAND, CALIF. MATTOON, ILL.

FORM 240 REV. 5-42 1M TRANS. 1M BOND

L-9664

PLATE
No. K-1588

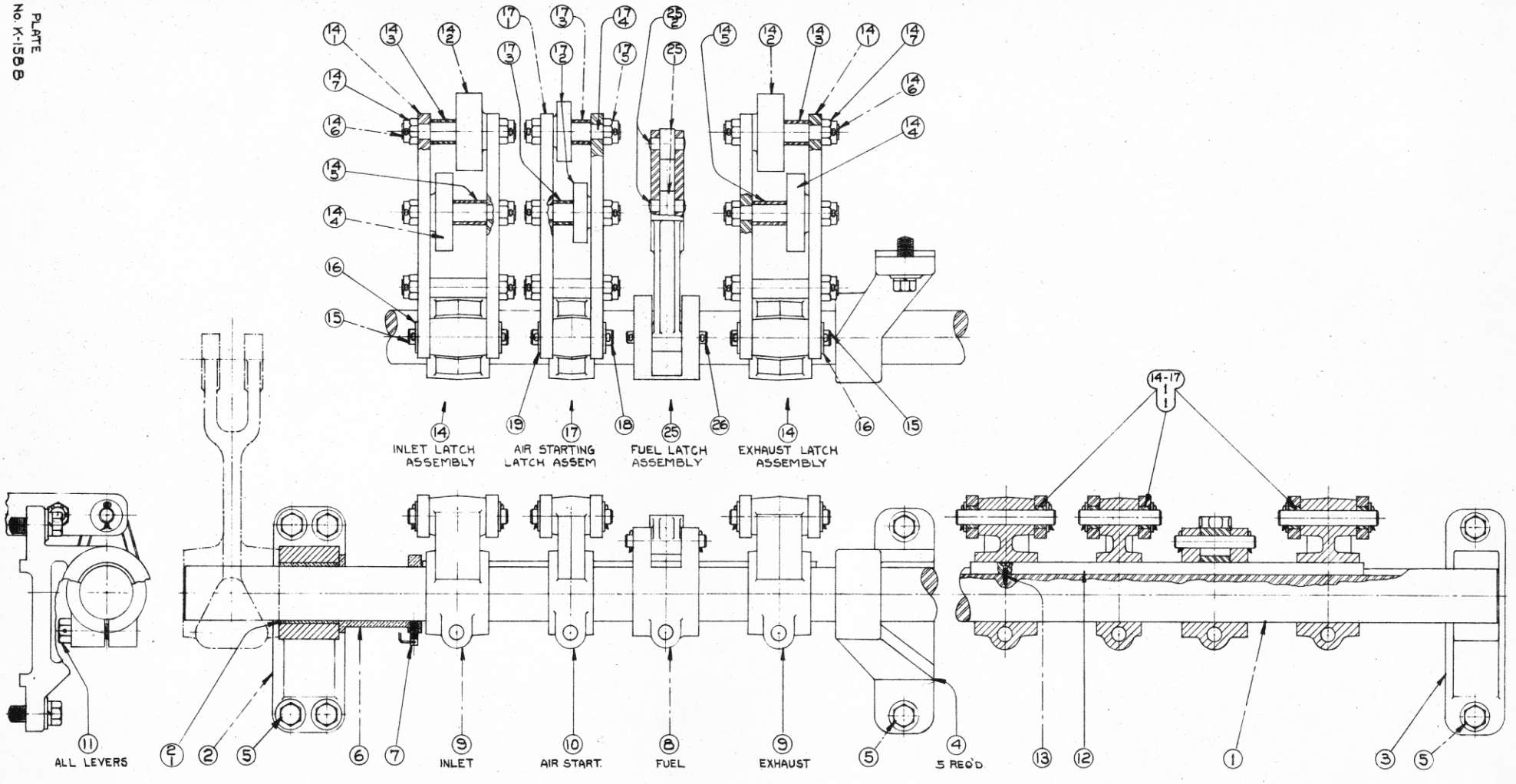

EXTRA COPIES TO

TYPED BY MED DATE [illegible] ISSUED BY DATE CHKD. APRVD.

CHANGES

#1 5/13/38 Changed Part No. C-7108L16½ To C-9532 - Added Six #10-24 Mach. Screws - Chg'd. 24 - 5/8-11 Capscrews To C-2410L2½ Added Wire 28" Lg.

#2 6/8/38 Line 32 Part No. Was X2554

#3 3-20-41 Removed Part Nos. C-9307 - C-9520 - C-9519 & C-9521 Also Twelve 1/2-20 Half Nuts

L-9666

ALWAYS GIVE PART NUMBER—PART NAME—ENGINE NUMBER
FOR STD. HARDWARE WITHOUT PART NUMBER GIVE DESCRIPTION AND SIZE
* INDICATES PART NOT SERVICED INDIVIDUALLY

PLATE NO. K-1588

LINE NO.	DRWG. NO.	REF. NO.	*	PART NO.	NO. REQD.	PART NAME	ASSEM. DRWG. NO.
1		1		K-1432	1	Shaft - Latch	
2	C-9273	2		X2520	1	Bearing Assembly - Latch Shaft - (Gov. End)	
3		3		W-1277	1	Bearing - Latch Shaft - (Pump End)	
4		4		W-1276	5	Bearing - Latch Shaft - (Intermediate)	
5		5			16	Capscrew -- 5/8-11-NC x 1 3/4 Lg. - - (Steel)	
6		5			16	Lockwasher -- 5/8 SAE Reg. - - (Steel)	
7		6		C-9334	1	Collar - Latch Shaft Thrust	
8		7		C-8217	1	Setscrew - Collar to Latch Shaft	
9					1	Wire -- #16 Ga. x 11 Lg. - - (Steel)	
10		8		C-9274	6	Lever - Fuel Spray Valve Latch	
11		9		F-5754	12	Lever - Inlet & Exhaust Valve Latch	
12		10		F-5771	6	Lever - Air Starting Valve Latch	
13	C-2410	11		C-2410L2½	24	Capscrew - Latch Lever Clamp	
					6	Wire -- #16 Ga. x 28 Lg. - - (Steel)	
15		12		C-9532	6	Key - Latch Levers to Shaft	
16		13			6	Machine Screw -- #10-24 x 3/4 Lg. - Flat Fill. Hd. (Steel)	
17	F-5791	14		X2555	12	Latch Assembly - Inlet & Exhaust Valve	
18		15		C-9300	12	Pin - Inlet & Exhaust Valve Latch to Lever	
19		16			24	Plain Washer -- 5/8 SAE Std. - - (Steel)	
20		15			24	Cotter Pin -- 5/32 x 1 Lg. - - (Steel)	
21							
22	F-5792	17		X2556	6	Latch Assembly - Air Starting Valve	
23		18		C-9301	6	Pin - Air Start. Valve Latch to Lever	
24		19			12	Plain Washer -- 5/8 SAE Std. - - (Steel)	
25		18			12	Cotter Pin -- 5/32 x 1 Lg. - - (Steel)	
26							
27							
28							
29							
30							
31							
32	C-9573	25		X2636	6	Latch Assembly - Fuel Spray Valve	
33		26		C-9302	6	Pin - Fuel Spray Valve Latch to Lever	
34		26			12	Cotter Pin -- 5/32 x 1 Lg. - - (Steel)	
35							
36							
37							
38							
39							
40							
41						---- NOTE ----	
42						For Turbo-charged Engines assemble Latches on	
43						Shaft as per Drwg. W-1738.	
44							
45							
46							
47							
48							
49							
50							

L-9666

FOR OPP. HAND SEE

FOR OPP. ROT. SEE L-9665

NAME LATCH SHAFT GROUP (OUTBOARD ROTATION)

ORIGINALLY ISSUED FOR 6 CYL. 14 1/2 x 18 MARINE

FOR TOTAL REQUIREMENTS PER ENGINE MULTIPLY NO. REQ'D GIVEN ABOVE BY NO. REQ'D FOR THIS GROUP GIVEN ON INDEX SHEET

PARTS LIST

ATLAS IMPERIAL DIESEL ENGINE CO.
OAKLAND, CAL. MATTOON, ILL.

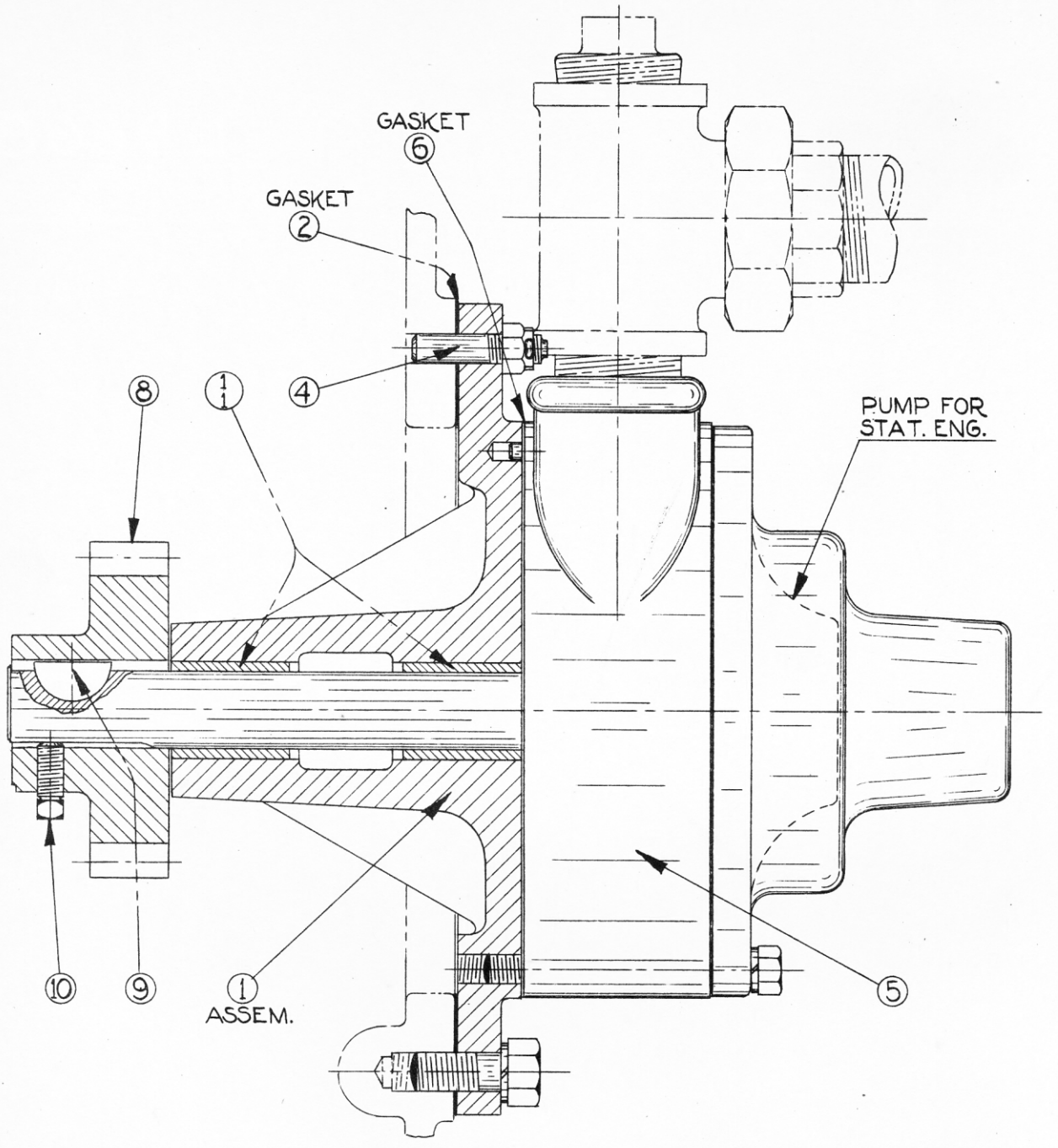

DETAIL OF PUMPS

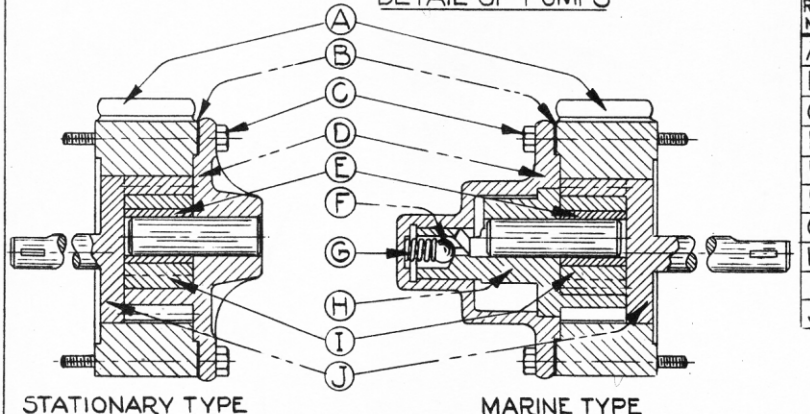

STATIONARY TYPE

MARINE TYPE

REF. No.	PART NAME	MARINE PART No.	STAT. PART No.
A	HOUSING	C-9403-P1	C-10007-P1
B	GASKET	C-9288P	C-9288-P
C	CAPSCREW	3/8-16×3 3/4	3/8-16×3 3/4
D	COVER	C-9403-P2	C-10007-P2
E	BUSHING	C-9403-P3	C-9403-P3
F	STEEL BALL	13/16 DIA	
G	SPRING	C-9403-P4	
H	CARRIER & PIN	C-9403-P5	
I	IDLER & BUSHING	C-9403-P6	C-9403-P6
J	ROTOR & SHAFT	C-9403-P7	C-9403-P7

NOTE--ORDER PUMP PARTS AS PER ABOVE PART NUMBERS. THESE PARTS ARE NOT LISTED ON GROUP SHEET. PARTS NOT LISTED ARE NOT SOLD INDIVIDUALLY.

PLATE
No. W-1329
ED-2

DO NOT ORDER PARTS BY REF. No.

EXTRA COPIES TO

TYPED BY DJA DATE 2/1/43 CHKD. DATE 2-10-43 ISSUED BY APRVD.

Retyped from 4/8/38 (No Changes)

CHANGES #5

CHANGES

ALWAYS GIVE PART NUMBER—PART NAME—ENGINE NUMBER
FOR STD. HARDWARE WITHOUT PART NUMBER GIVE DESCRIPTION AND SIZE
* INDICATES PART NOT SERVICED INDIVIDUALLY

L-9668

PLATE NO. W-1329

LINE NO.	DRWG. NO.	REF. NO.	PART NO.	NO. REQD.	PART NAME	ASSEM. DRWG. NO.
1	C-9387	1	X2560	1	ADAPTOR ASSEMBLY - Lube Oil Sump Pump	
2		2	C-9390	1	GASKET - Adaptor to Governor Housing	
3				6	CAPSCREW -- 1/2-13-NC x 1 1/4 Lg. - - (St.)	
4				6	LOCKWASHER -- 1/2 SAE Reg. - - (St.)	
5	C-7950	4	C-7950L1 3/4	2	PIN - Adaptor to Gov. Housing Dowel	
6				2	CASTLE NUT -- 3/8-24-NF-Hex. - - (St.)	
7				2	COTTER PIN -- 3/32 x 3/4 Lg. - - (St.)	
8	C-9403	5	C-9403-P	1	PUMP - Lube Oil Sump	
9	C-9288	6	C-9288-P	3	GASKET - Pump to Adaptor	
10				8	CAPSCREW -- 3/8-16-NC x 3 3/4 Lg. - - (St.)	
11				8	LOCKWASHER -- 3/8 SAE Reg. - - (St.)	
12		8	C-9360	1	GEAR - Lube Oil Sump Pump Drive	
13		9		1	WOODRUFF KEY -- 1/4 x 1 Std. - - (St.)	
14		10	C-8217	1	SETSCREW - Gear to Shaft	
15				1	WIRE -- #16 Ga. x 8 Lg. - - (St.)	
16						
17					--Sump Pump Suction Line to Base--	
18				1	CLOSE NIPPLE -- 1 1/4 Std. -- (Brass)	
19				1	UNION TEE -- 1 1/4 Std. (Crane #598 or Eq.)-(M.I.	
20				1	PIPE PLUG -- 1 1/4 Std. - - (C.I.)	
21				1	NIPPLE -- 1 1/4 x 9 3/4 Lg. - (Brass)	
22				1	ELBOW -- 1 1/4 Std. - - (M.I.)	
23				1	NIPPLE -- 1 1/4 x 9 1/2 Lg. - - (Brass)	
24				1	UNION -- 1 1/4 Std. (Crane #519 or Eq.)--(M.I.)	
25				1	CLOSE NIPPLE -- 1 1/4 Std. - - (Brass)	

FOR OPP. HAND SEE

FOR OPP. ROT. SEE

NAME OIL SUMP PUMP GROUP

ORIGINALLY ISSUED FOR 6 CYL. 14 1/2 x 18 MARINE

FOR TOTAL REQUIREMENTS PER ENGINE MULTIPLY NO. REQ'D GIVEN ABOVE BY NO. REQ'D FOR GROUP GIVEN ON INDEX SHEET

FORM 240 REV. 5-42 1M TRANS 1M BOND

PARTS LIST

ATLAS IMPERIAL DIESEL ENGINE CO.
OAKLAND, CALIF. MATTOON, ILL.

L-9668

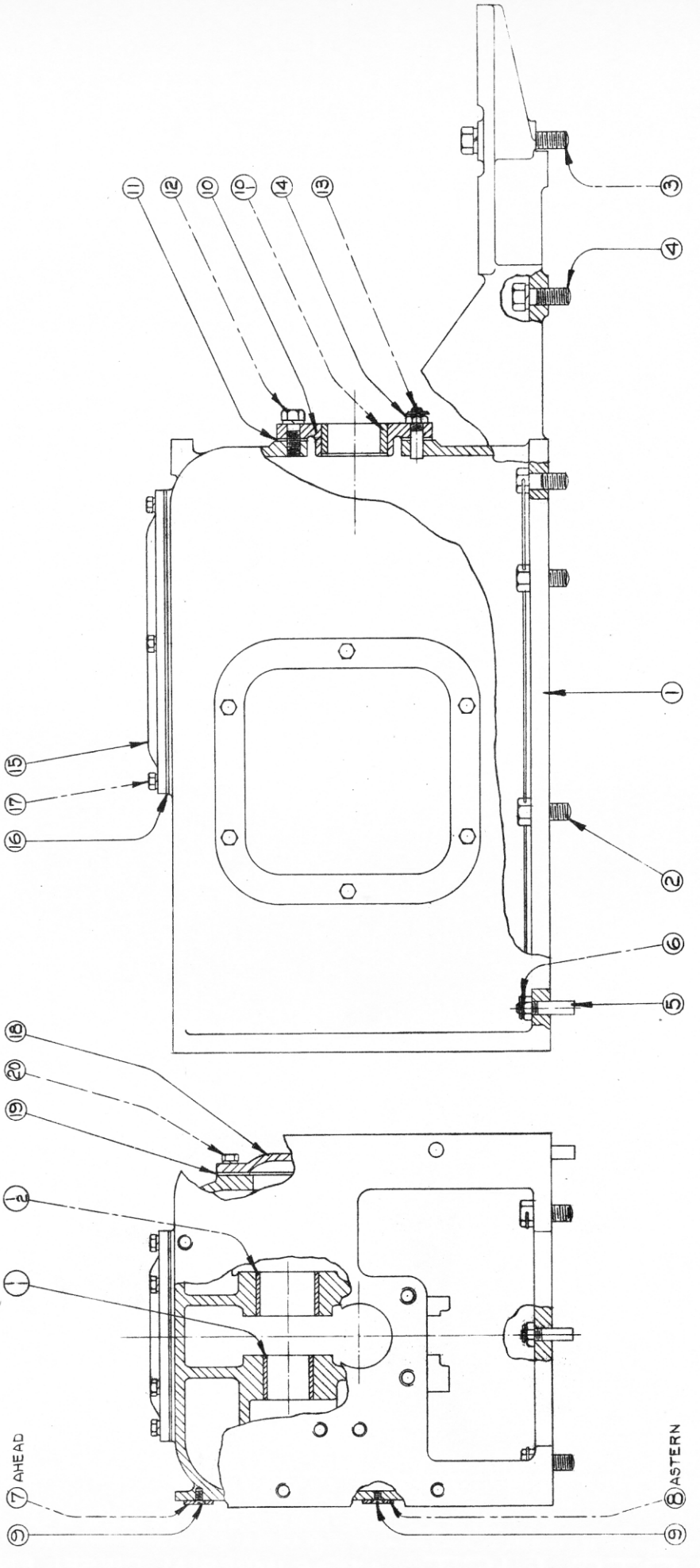

PLATE
No. K-1597

EXTRA COPIES TO

TYPED BY DJA DATE 2/1/43 CHKD [illegible] DATE 2-10-43 ISSUED BY [illegible] APRVD

Retyped from 4/12/38 (No Changes)

CHANGES #2

CHANGES

ALWAYS GIVE PART NUMBER—PART NAME—ENGINE NUMBER
FOR STD. HARDWARE WITHOUT PART NUMBER GIVE DESCRIPTION AND SIZE
* INDICATES PART NOT SERVICED INDIVIDUALLY

L-9670

PLATE NO. K-1597

ASSEM. DRWG. NO. K-1438

LINE NO.	DRWG. NO.	REF. NO.	PART NO.	NO. REQD.	PART NAME
1	C-9408	1	X2571	1	HOUSING ASSEMBLY - Reversing Rack
2	C-2410	2	C-2410L1 1/2	7	CAPSCREW - Housing to Centerframe
3				1	WIRE -- #16 Ga. x 50 Lg. - - (St.)
4		3		2	CAPSCREW -- 5/8-11-NC x 3 1/2 Lg. - - (St.)
5		4		2	CAPSCREW -- 5/8-11-NC x 1 3/4 Lg. - - (St.)
6				4	LOCKWASHER -- 5/8 SAE Reg. - - (St.)
7	C-6633	5	C-6633L2 1/4	2	PIN - Housing to Centerframe Dowel
8		6		2	NUT -- 1/2-13-NC-Hex. - - (St.)
9		6		2	COTTER PIN -- 3/32 x 3/4 Lg. - - (St.)
10		7	C-9361	1	PLATE - Rack Indicator (Ahead)
11		8	C-9362	1	PLATE - Rack Indicator (Astern)
12		9		4	MACHINE SCREW -- #10-24 x 3/8 Lg. - Flat Head - (Brass)
13					
14	C-9442	10	X2577	1	GUIDE ASSEMBLY - Reversing Rack
15		11	C-9381	1	GASKET - Guide to Housing
16		12		2	CAPSCREW -- 1/2-13-NC x 1 1/4 Lg. - - (St.)
17		12		2	LOCKWASHER -- 1/2 SAE Reg. - - (St.)
18	C-6633	13	C-6633L2	2	PIN - Guide to Housing Dowel
19		14		2	NUT -- 1/2-13-NC-Hex. - - (St.)
20		14		2	COTTER PIN -- 3/32 x 3/4 Lg. - - (St.)
21		15	F-5780	1	COVER - Reversing Rack Housing Top
22		16	C-9400	1	GASKET - Cover to Housing
23		17		6	CAPSCREW -- 3/8-16-NC x 7/8 Lg. - - (St.)
24		17		6	LOCKWASHER -- 3/8 SAE Reg. - - (St.)
25		18	F-5774	1	COVER - Reversing Rack Housing Side
26		19	C-9401	1	GASKET - Cover to Housing
27		20		6	CAPSCREW -- 3/8-16-NC x 7/8 Lg. - - (St.)
28		20		6	LOCKWASHER -- 3/8 SAE Reg. - - (St.)
29					
30					
31					
32					
33					
34					
35					
36					
37					
38					
39					
40					
41					
42					
43					
44					
45					
46					
47					
48					
49					
50					

FOR OPP. HAND SEE L-9671

FOR OPP. ROT. SEE

NAME REVERSING RACK HOUSING & COVERS GROUP

ORIGINALLY ISSUED FOR 6 CYL. 14 1/2 x 18 MAR.-R.H.

FOR TOTAL REQUIREMENTS PER ENGINE MULTIPLY NO. REQ'D GIVEN ABOVE BY NO. REQ'D FOR GROUP GIVEN ON INDEX SHEET

PARTS LIST

ATLAS IMPERIAL DIESEL ENGINE CO.
OAKLAND, CALIF. MATTOON, ILL.

FORM 240 REV. 5-42 1M TRANS. 1M BOND

L-9670

EXTRA COPIES TO

TYPED BY MED DATE 4-17-42 ISSUED BY [illegible] DATE 4-17-42 CHKD. [illegible] APRVD. [illegible]

CHANGES #5 Revised & Retyped From 7-25-39

CHANGES

ALWAYS GIVE PART NUMBER—PART NAME—ENGINE NUMBER
FOR STD. HARDWARE WITHOUT PART NUMBER GIVE DESCRIPTION AND SIZE
* INDICATES PART NOT SERVICED INDIVIDUALLY

PLATE NO. L-9674

LINE NO.	DRWG. NO.	REF. NO.	*	PART NO.	NO. REQD.	PART NAME	ASSEM. DRWG. NO.
1				W-1300	1	BOARD - Gage	
2				F-5392	1	BRACE - Gage Board (Board to Rail & Man.)	
3					1	CAPSCREW(Brace to Board)--3/8-16 x 1 Lg.-(St.)	
4					1	LOCKWASHER -- 3/8 SAE Reg. - - (St.)	
5				C-6477	1	CLAMP - Brace to Air Start. Man.	
6					2	CAPSCREW -- 3/8-16-NC x 1 1/4 Lg. - (St.)	
7					2	NUT -- 3/8-16-NC-Hex. - - (St.)	
8					2	LOCKWASHER -- 3/8 SAE Reg. - - (St.)	
9				2C1195	1	CLAMP - Brace to Rail	
10					2	CAPSCREW -- 3/8-16-NC x 1 1/4 Lg. - (St.)	
11					2	NUT -- 3/8-16-NC-Hex. - - (St.)	
12				F-6775	1	BRACE - Gage Board to Rocker Shaft Bearing	
13					2	CAPSCREW(Brace to Board)--3/8-16-NC x 7/8 Lg(St)	
14					2	LOCKWASHER -- 3/8 SAE Reg. - (St.)	
15					4	HALF NUT(Brace to Rocker Brg.)--7/8-9-NC-Hex(St)	
16							
17	2C2622			1217-E	1	GAGE - Fuel Pressure -- 6" Dial - 10000 Lb.	
18				937-E	1	GAGE - Air Pressure -- 6" Dial - 300 Lb.	
19	C-9850			C-9850-P	1	GAGE - Lube Oil Pressure -- 6" Dial - 60 Lb.	
20					9	MACHINE SCREW--1/4-20 x 7/8 Lg.-Rnd.Hd.-(Brass)	
21					9	NUT -- 1/4-20-NC-Hex. - - (Brass)	
22					9	LOCKWASHER -- 1/4 SAE Reg. -- (St.)	
23							
24						---- Air & Lube Oil Gage Fittings ----	
25					2	COUPLING -- 1/4 Std. Pipe -- (M.I.)	
26					2	STREET ELL -- 1/4 Std. - - (M.I.)	
27					2	NIPPLE -- 1/4 x 1 1/4 Lg. - (W.I.)	
28					1	ELBOW (Air Gage) -- 1/4 Std. - (M.I.)	
29					1	REDUCING ELBOW(Oil Gage)--1/4 x 1/8 Std.(M.I.)	
30							
31							
32							
33							
34							
35							
36							
37							
38							
39							
40							
41							
42							
43							
44							
45							
46							
47							
48							
49							
50							

FOR OPP. HAND SEE

FOR OPP. ROT. SEE

NAME PRESSURE GAGE GROUP

ORIGINALLY ISSUED FOR 6 CYL. 14 1/2 x 18 MARINE

FOR TOTAL REQUIREMENTS PER ENGINE MULTIPLY NO. REQ'D GIVEN ABOVE BY NO. REQ'D FOR THIS GROUP GIVEN ON INDEX SHEET

PARTS LIST

ATLAS IMPERIAL DIESEL ENGINE CO.
OAKLAND, CALIF. MATTOON, ILL.

FORM NO. 240 10-39

L-9674

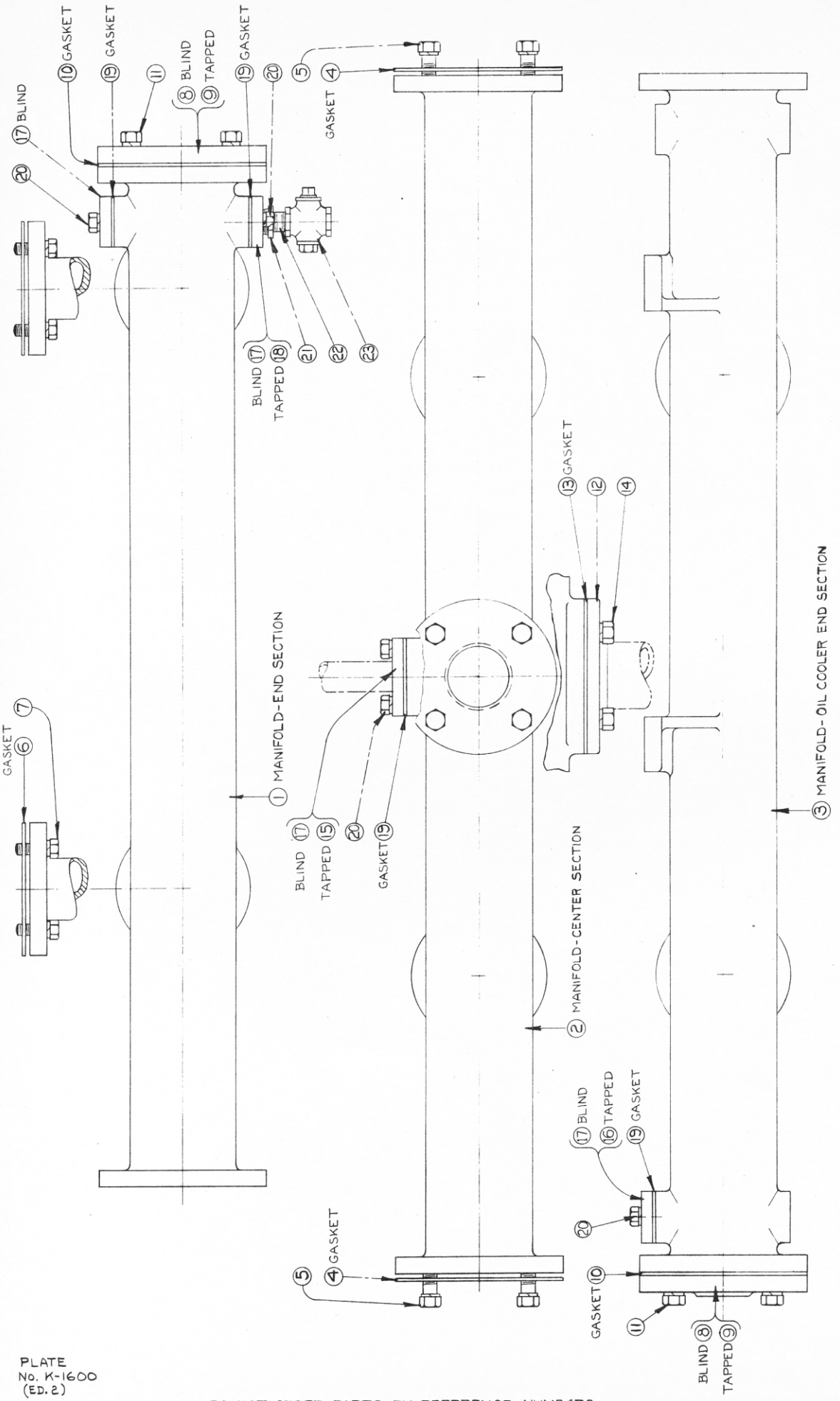

PLATE
No. K-1600
(ED. 2)

DO NOT ORDER PARTS BY REFERENCE NUMBERS

EXTRA COPIES TO

TYPED BY MED DATE 4/13/38 ISSUED BY [illegible] DATE 4-28-38 CHKD. [illegible] APRVD. [illegible]

CHANGES

CHANGES

MASTER PARTS CATALOG

ALWAYS GIVE PART NUMBER—PART NAME—ENGINE NUMBER
FOR STD. HARDWARE WITHOUT PART NUMBER GIVE DESCRIPTION AND SIZE
* INDICATES PART NOT SERVICED INDIVIDUALLY

L-9675

PLATE NO. K-1600

LINE NO.	DRWG. NO.	REF. NO.	*	PART NO.	NO. REQD.	PART NAME	ASSEM. DRWG. NO.
1	F-5439	1		780B-V6	1	Manifold - Water Inlet (End Sect.)	
2		2		S-1591	1	Manifold - Water Inlet (Center Sect.)	
3		3		W-1293	1	Manifold - Water Inlet (Cooler End Sect.)	
4		4		C-8243	2	Gasket - Manifold Center to End Section	
5		5			8	Capscrew -- 5/8-11-NC x 1 3/4 Lg. - - (Steel)	
6		5			8	Lockwasher -- 5/8 SAE Reg. - - (Steel)	
7		6		C-8245	6	Gasket - Manifold to Cylinder	
8		7			24	Capscrew -- 1/2-13-NC x 1 1/2 Lg. - - (Steel)	
9		7			24	Lockwasher -- 1/2 SAE Reg. - - (Steel)	
10	C-1059	8		763-B6	1	Flange - Manifold End (Blind)	
11		9		F-5802	1	Flange - Manifold End (Compressor End)	
12		10		C-8243	2	Gasket - Flange to Manifold	
13		11			8	Capscrew -- 5/8-11-NC x 1 3/4 Lg. - - (Steel)	
14		11			8	Lockwasher -- 5/8 SAE Reg. - - (Steel)	
15	C-9461	12		C-9461-P	1	Flange - Manifold Water Inlet Pipe	
16		13		C-8244	1	Gasket - Flange to Manifold	
17		14			4	Capscrew -- 5/8-11-NC x 1 1/2 Lg. - - (Steel)	
18		14			4	Lockwasher -- 5/8 SAE Reg. - - (Steel)	
19	C-5350	15		784-B	1	Flange - Cyl. Head Cooling Manifold Pipe	
20		16		C-9346	1	Flange - Manifold Outlet to Air Comp. Pipe	
21	C-3419	17		784	1	Flange - Manifold End Section Pipe (Blind)	
22		18		C-9346	1	Flange - Water Inlet Manifold Drain Pipe	
23		19		S-994	4	Gasket - Pipe Flange to Manifold	
24		20			8	Capscrew -- 1/2-13-NC x 1 1/4 Lg. - - (Steel)	
25		20			8	Lockwasher -- 1/2 SAE Reg. - - (Steel)	
26		21			1	Reducing Bushing(Man. Drain)--$\frac{3}{4}$ x $\frac{1}{8}$ Std. - (Brass)	
27		22			1	Nipple -- 1/2 x 1 1/2 Lg. - - (Brass)	
28	C-9053	23		C-9053-P$\frac{1}{8}$	1	Cock - Water Inlet Manifold Drain	
29							
30							
31							
32							
33							
34							
35							
36							
37							
38							
39							
40							
41							
42							
43							
44							
45							
46							
47							
48							
49							
50							

L-9675

FOR OPP. HAND SEE L-9676

FOR OPP. ROT. SEE

NAME WATER INLET MANIFOLD GROUP

ORIGINALLY ISSUED FOR 6 CYL. 14 1/2 x 18 MARINE - R.H.

FOR TOTAL REQUIREMENTS PER ENGINE MULTIPLY NO. REQ'D GIVEN ABOVE BY NO. REQ'D FOR THIS GROUP GIVEN ON INDEX SHEET

PARTS LIST

ATLAS IMPERIAL DIESEL ENGINE CO.
OAKLAND
MATTOON, ILL.

FORM NO. 240-38M-10-37

PLATE No. K-1601 (ED 3)

DO NOT ORDER PARTS BY REFERENCE NUMBERS

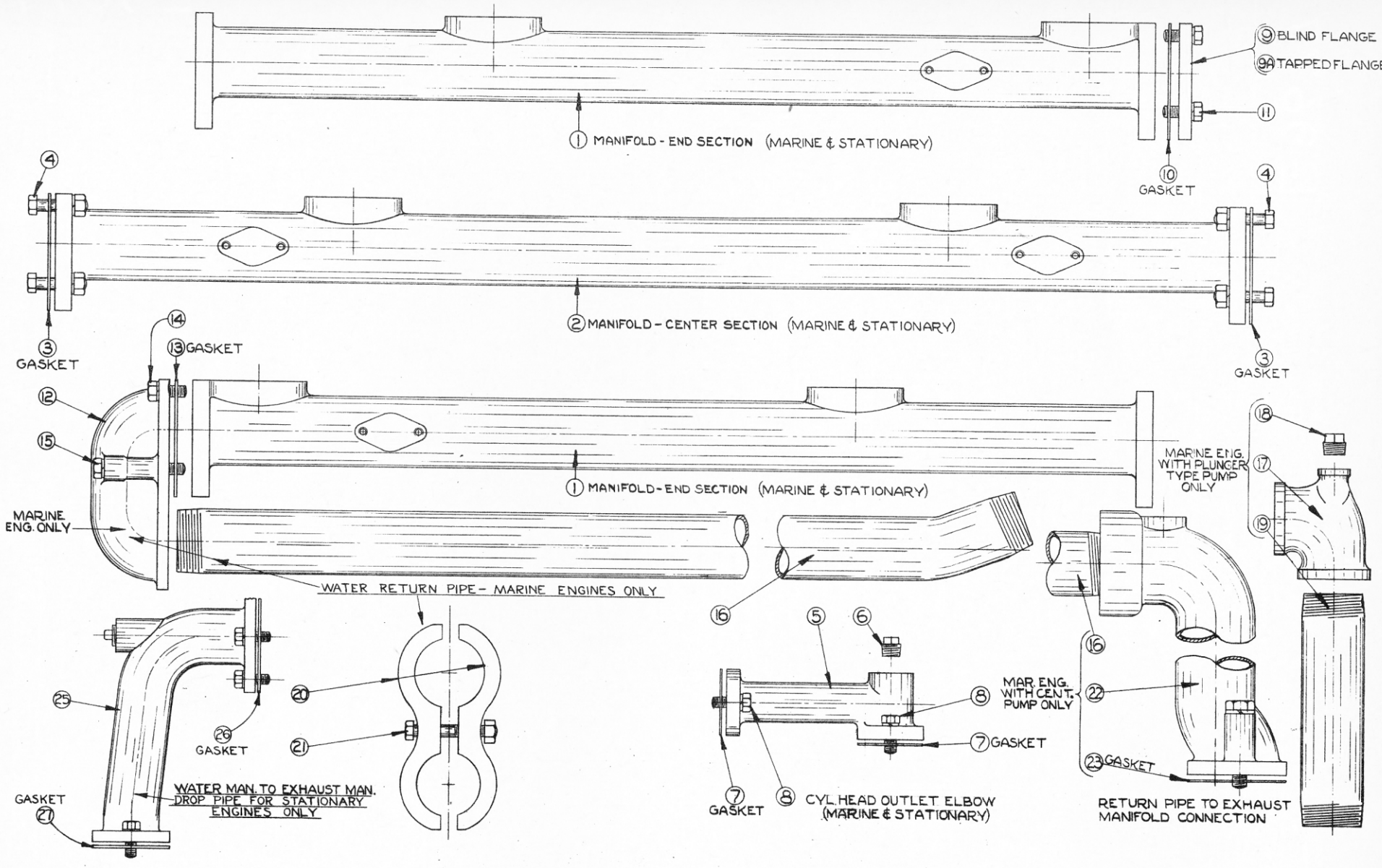

EXTRA COPIES TO

TYPED BY MKD DATE 4/13/38 ISSUED BY [illegible] DATE 4-18-38 CHKD. [illegible] APRVD. [illegible]

MASTER PARTS CATALOG CHANGES

CHANGES

L-9677

ALWAYS GIVE PART NUMBER—PART NAME—ENGINE NUMBER
FOR STD. HARDWARE WITHOUT PART NUMBER GIVE DESCRIPTION AND SIZE
* INDICATES PART NOT SERVICED INDIVIDUALLY

PLATE NO. K-1601

LINE NO.	DRWG. NO.	REF. NO.	*	PART NO.	NO. REQD.	PART NAME	ASSEM. DRWG. NO.
1		1		F-1778	2	Manifold - Water Outlet (End Sect.)	
2		2		F-1779	1	Manifold - Water Outlet (Center Sect.)	
3		3		C-8245	2	Gasket - Manifold Center to End Section	
4		4			8	Capscrew -- 1/2-13-NC x 2 1/4 Lg. - - (Steel)	
5		4			8	Nut -- 1/2-13-NC-Hex. - - (Steel)	
6		4			8	Lockwasher -- 1/2 SAE Reg. - - (Steel)	
7		5		F-1777	6	Elbow - Cylinder Head Water Outlet	
8		6			6	Pipe Plug -- 1/2 Std. - - (C.I.)	
9		7		S-1042	12	Gasket - Elbow to Cyl. Head & Manifold	
10		8			24	Capscrew -- 1/2-13-NC x 1 1/4 Lg. - - (Steel)	
11		8			24	Lockwasher -- 1/2 SAE Reg. - - (Steel)	
12		9		C-3658	1	Flange - Manifold End (Blind)	
13		10		C-8245	1	Gasket - Flange to Manifold	
14		11			4	Capscrew -- 1/2-13-NC x 1 1/4 Lg. - - (Steel)	
15		11			4	Lockwasher -- 1/2 SAE Reg.- - (Steel)	
16		12		F-5799	1	Return - Manifold Water Outlet Pipe	
17		13		C-8245	1	Gasket - Pipe Return to Manifold	
18		14			2	Capscrew -- 1/2-13-NC x 1 1/4 Lg. - - (Steel)	
19		15			2	Capscrew -- 1/2-13-NC x 3 3/4 Lg. - - (Steel)	
20					4	Lockwasher -- 1/2 SAE Reg. - - (Steel)	
21		16		C-9439	1	Pipe - Water Outlet Manifold Return	
22		17			1	Tee -- 2 1/2 x 3/4 x 2 1/2 Std. Reducing - - (Brass)	
23		18			1	Pipe Plug -- 3/4 Std. - - (Brass)	
24		19			1	Nipple(To 3x. Man. Flange)--2½ x 10½ Lg. - - (Brass)	
25		20		C-9395	6	Clamp - Water Outlet Manifold Return Pipe	
26		21			6	Capscrew -- 1/2-13-NC x 2 3/4 Lg. - - (Steel)	
27		21			6	Nut -- 1/2-13-NC-Hex. - - (Steel)	
28							
29							
30							
31							
32							
33							
34							
35							
36							
37							
38							
39							
40							
41							
42							
43							
44							
45							
46							
47							
48							
49							
50							

L-9677

FOR OPP. HAND SEE L-9678

FOR OPP. ROT. SEE

NAME WATER OUTLET MANIFOLD GROUP

ORIGINALLY ISSUED FOR 6 CYL. 14 1/2 x 18 MARINE - R.H.

FOR TOTAL REQUIREMENTS PER ENGINE MULTIPLY NO. REQ'D GIVEN ABOVE BY NO. REQ'D FOR THIS GROUP GIVEN ON INDEX SHEET

PARTS LIST

ATLAS IMPERIAL DIESEL ENGINE CO.
OAKLAND, CALIF. MATTOON, ILL.

FORM NO. 240-3M-10-37

PLATE
No. W-1337

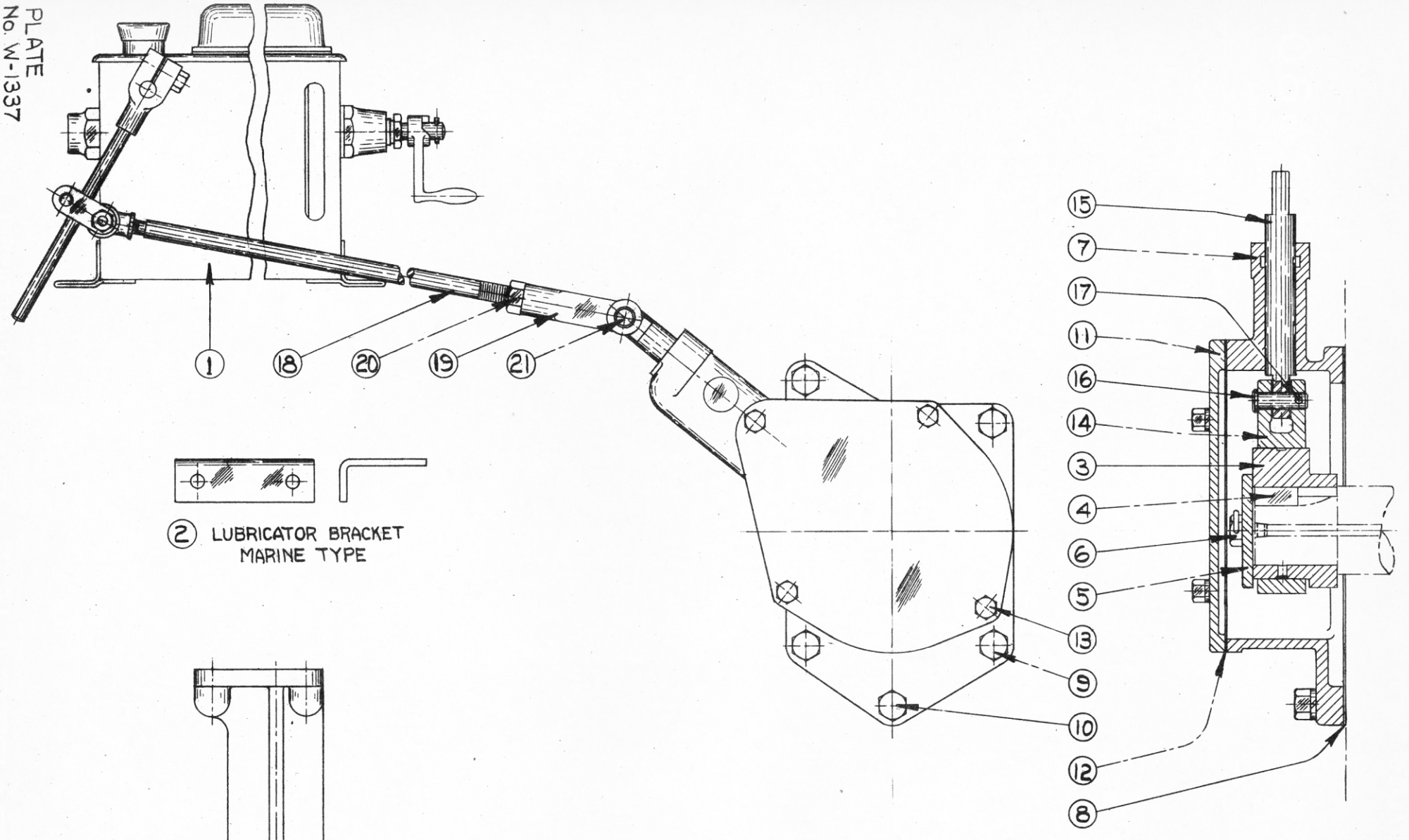

② LUBRICATOR BRACKET
MARINE TYPE

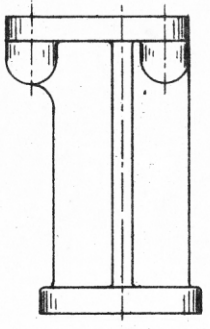

② LUBRICATOR BRACKET
STATIONARY TYPE

EXTRA COPIES TO

TYPED BY DJK DATE 2/2/43 CHKD DATE 2-10-43 ISSUED BY APRVD.

CHANGES #2 Retyped from 3/4/16 (No Changes)

CHANGES

L-9680

ALWAYS GIVE PART NUMBER—PART NAME—ENGINE NUMBER
FOR STD. HARDWARE WITHOUT PART NUMBER GIVE DESCRIPTION AND SIZE
* INDICATES PART NOT SERVICED INDIVIDUALLY

PLATE NO. W-1337

LINE NO.	DRWG. NO.	REF. NO.	PART NO.	NO. REQD.	PART NAME	ASSEM. DRWG. NO.
1		1		1	LUBRICATOR -- Madison-Kipp L.H. Side Drive 14 Feed -- As Per Their Drawing 10720	
2				4	CAPSCREW -- 3/8-16-NC x 1 Lg.-(St.)	
3				4	NUT -- 3/8-16-NC-Hex. - - (St.)	
4				4	PLAIN WASHER -- 3/8 SAE Std. - - (St.)	
5				4	LOCKWASHER -- 3/8 SAE Reg. - - (St.)	
6		2	C-9462	2	BRACKET - Lubricator Support	
7				2	CAPSCREW(Operat. Side)--½-13-NC x 1½ Lg. - (St.)	
8				2	CAPSCREW(Man. Side)--½-13-NC x 7/8 Lg. - - (St.)	
9				4	LOCKWASHER -- 1/2 SAE Reg. - - (St.)	
10		3	F-5339	1	ECCENTRIC - Lubricator Drive	
11	C-6710	4	C-6710L1 1/4	1	KEY - Eccentric to Camshaft	
12		5	C-8202	1	WASHER - Eccentric Retainer	
13	C-2408	6	C-2408L 7/8	2	CAPSCREW - Washer to Camshaft	
14				1	WIRE -- #16 Ga. x 5 Lg. - - (St.)	
15		7	W-1301	1	HOUSING - Lubricator Drive	
16		8	C-8143	1	GASKET - Housing to Centerframe	
17		9		4	CAPSCREW -- 1/2-13-NC x 1 1/4 Lg. - - (St.)	
18		10		1	CAPSCREW -- 1/2-13-NC x 1 1/2 Lg. - - (St.)	
19				5	LOCKWASHER -- 1/2 SAE Reg. - - (St.)	
20		11	W-974	1	COVER - Lubricator Drive Housing	
21		12	C-8142	1	GASKET - Cover to Housing	
22		13		4	CAPSCREW -- 3/8-16-NC x 1 Lg. - - (St.)	
23		13		4	LOCKWASHER -- 3/8 SAE Reg. - - (St.)	
24		14	F-5340	1	STRAP - Lubricator Drive Eccentric	
25		15	C-8209	1	PLUNGER - Lubricator Drive	
26		16		1	PIN(Plunger to Strap)--½SAE Std. Rod-End Pin - (St.)	
27		17		1	COTTER PIN -- 1/8 x 1 1/2 Lg. - - (St.)	
28		18	C-9463	1	ROD - Lubricator Drive	
29		19		1	ROD-END -- 1/2 SAE Std. - Light Series - (St.)	
30		20		1	NUT -- 1/2-20-NF-Hex. - - (St.)	
31		21		1	PIN(Rod to Plunger)--½ SAE Std. Rod-End Pin-(St.)	
32				1	COTTER PIN -- 1/8 x 7/8 Lg. - - (St.)	
33						
34						
35						
36						
37						
38						
39						
40						
41						
42						
43						
44						
45						
46						
47						
48						
49						
50						

FOR OPP. HAND SEE L-9681

FOR OPP. ROT. SEE

NAME LUBRICATOR & DRIVE GROUP

ORIGINALLY ISSUED FOR 6 CYL. 14 1/2 x 18 MAR.-R.H.

FOR TOTAL REQUIREMENTS PER ENGINE MULTIPLY NO. REQ'D GIVEN ABOVE BY NO. REQ'D FOR GROUP GIVEN ON INDEX SHEET

PARTS LIST

ATLAS IMPERIAL DIESEL ENGINE CO.
OAKLAND, CALIF. MATTOON, ILL.

FORM 240 REV. 5-42 1M TRANS 1M BOND

L-9680

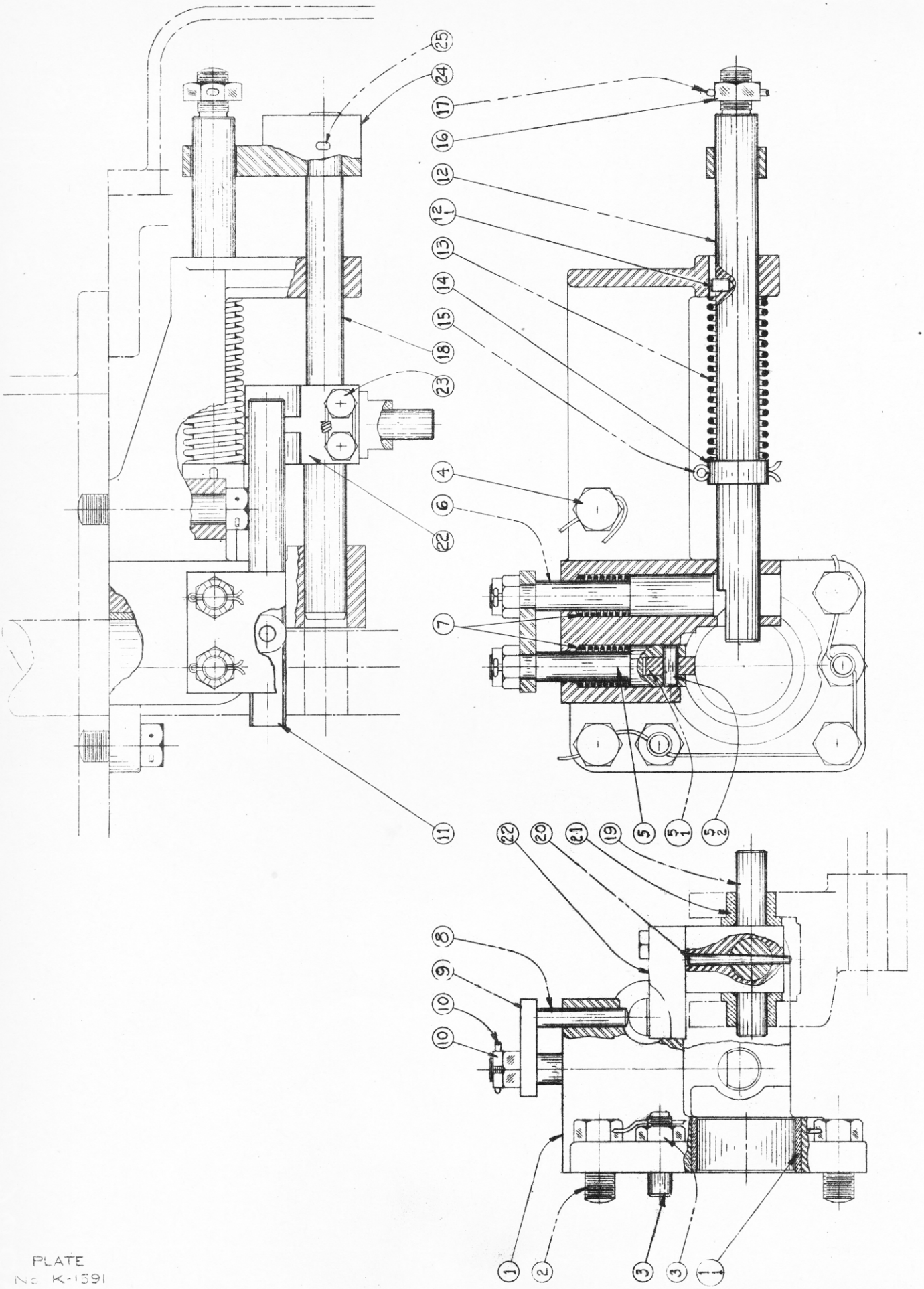

PLATE
No. K-1391

EXTRA COPIES TO

TYPED BY DJA DATE 2/2/43 CHKD. DATE 2-10-43 ISSUED BY APRVD.

Retyped from 4/19/38 (No Changes)

CHANGES #1

CHANGES

ALWAYS GIVE PART NUMBER—PART NAME—ENGINE NUMBER
FOR STD. HARDWARE WITHOUT PART NUMBER GIVE DESCRIPTION AND SIZE
* INDICATES PART NOT SERVICED INDIVIDUALLY

L-9686

PLATE NO. K-1591

LINE NO.	DRWG. NO.	REF. NO.	PART NO.	NO. REQD.	PART NAME	ASSEM. DRWG. NO.
1	C-9409	1	X2570	1	BRACKET ASSEMBLY - Rack Interlock	
2	C-2410	2	C-2410L1 1/4	3	CAPSCREW - Bracket to Rack Housing	
3	C-6633	3	C-6633L1 3/4	2	PIN - Bracket to Rack Housing Dowel	
4		3		2	HALF NUT -- 1/2-13-NC-Hex. - - (St.)	
5				1	WIRE(Capscrews & Dowel Pin)--16 Ga.x16 Lg. -(St.)	
6	C-2410	4	C-2410L3	1	CAPSCREW - Bracket to Rack Housing	
7				1	WIRE -- #16 Ga. x 8 Lg. - - (St.)	
8	C-9414	5	X2580	1	LIFTER ASSEMBLY - Rack Interlock Safety Pin	
9		6	C-9413	1	PIN - Rack Interlock Safety	
10		7	C-9458	2	SPRING - Rack Interlock Safety Pin & Lifter	
11		8	C-9418	1	PLUNGER - Rack Interlock Safety Pin Control	
12		9	C-9416	1	PLATE - Rack Interlock Safety Pin & Lifter	
13		10		2	CASTLE NUT -- 1/2-20-NF-Hex. - - (St.)	
14		10		2	COTTER PIN -- 3/32 x 1 Lg. - - (St.)	
15		11	C-9377	1	PIN - Rack Interlock Safety Pin Release	
16	C-9449	12	X2581	1	PIN ASSEMBLY - Rack Stop	
17		13	C-9098	1	SPRING - Rack Stop Pin	
18		14	C-9421	1	COLLAR - Rack Stop Pin Spring Retainer	
19		15		1	COTTER PIN -- 3/16 x 1 3/4 Lg. - - (St.)	
20		16		1	HALF NUT -- 5/8-11-NC-Hex. - - (St.)	
21		17		1	COTTER PIN -- 1/8 x 1 1/2 Lg. - - (St.)	
22		18	C-9419	1	PIN - Rack & Control Handle Interlock	
23		19	C-9379	1	CROSSHEAD - Rack & Control Handle Interlock Pin	
24		20		1	TAPER PIN -- No. 3 x 2 Lg. - - (St.)	
25		21	C-9380	2	BEARING - Crosshead Control Fork	
26		22	C-9378	1	KEY - Rack Interlock Safety Release Pin Control	
27	C-2406	23	C-2406L1 1/4	2	CAPSCREW - Key to Crosshead	
28				1	WIRE -- #16 Ga. x 3 Lg. - - (St.)	
29		24	C-9420	1	ARM - Rack Lock Pin Control	
30		25		1	COTTER PIN -- 5/32 x 1 3/4 Lg. - - (St.)	
31						
32						
33						
34						
35						
36						
37						
38						
39						
40						
41						
42						
43						
44						
45						
46						
47						
48						
49						
50						

FOR OPP. HAND SEE L-9687

FOR OPP. ROT. SEE

NAME RACK LOCK & INTERLOCK MECHANISM

ORIGINALLY ISSUED FOR 6 CYL. 14 1/2 x 18 MAR. R.H.

FOR TOTAL REQUIREMENTS PER ENGINE MULTIPLY NO. REQ'D GIVEN ABOVE BY NO. REQ'D FOR GROUP GIVEN ON INDEX SHEET

PARTS LIST

ATLAS IMPERIAL DIESEL ENGINE CO.
OAKLAND, CALIF. MATTOON, ILL.

FORM 240 REV. 5-42 1M TRANS. 1M BOND

L-9686

EXTRA COPIES TO

TYPED BY DJA DATE 2/2/43 CHKD. DATE 2-10-43 ISSUED BY APRVD.

CHANGES #4 Retyped from 4/22/38 (No Changes)

CHANGES

ALWAYS GIVE PART NUMBER—PART NAME—ENGINE NUMBER
FOR STD. HARDWARE WITHOUT PART NUMBER GIVE DESCRIPTION AND SIZE
* INDICATES PART NOT SERVICED INDIVIDUALLY

PLATE NO. L-9695

LINE NO.	DRWG. NO.	REF. NO.	PART NO.	NO. REQD.	PART NAME	ASSEM. DRWG. NO.
1					----Lubricator Piping - (Cam Side)----	
2				1	TUBE(Cyl. #1)--1/4 O.D. x .035 x 36 Lg.(S.D. Cop)	
3				1	TUBE(Cyl. #2)--1/4 O.D. x .035 x 64 Lg.(S.D. Cop)	
4				1	TUBE(Cyl. #3)--1/4 O.D. x .035 x 92 Lg.(S.D. Cop)	
5				1	TUBE(Cyl. #4)--1/4 O.D. x .035 x 118 Lg.(S.D.Cop)	
6				1	TUBE(Cyl. #5)--1/4 O.D. x .035 x 142 Lg.(S.D.Cop)	
7				1	TUBE(Cyl. #6)--1/4 O.D. x .035 x 176 Lg.(S.D.Cop)	
8	C-9832		C-9832-P 1/4	6	ELBOW - Tube	
9					---- Lubricator Piping - (Exhaust Side) ----	
10				1	TUBE(Cyl. #1)--1/4 O.D. x .035 x 47 Lg.(S.D.Cop)	
11				1	TUBE(Cyl. #2)--1/4 O.D. x .035 x 76 Lg.(S.D.Cop)	
12				1	TUBE(Cyl. #3)--1/4 O.D. x .035 x 106 Lg.(S.D.Cop)	
13				1	TUBE(Cyl. #4)--1/4 O.D. x .035 x 136 Lg.(S.D.Cop)	
14				1	TUBE(Cyl. #5)--1/4 O.D. x .035 x 166 Lg.(S.D.Cop)	
15				1	TUBE(Cyl. #6)--1/4 O.D. x .035 x 196 Lg.(S.D.Cop)	
16	C-9832		C-9832-P 1/4	6	ELBOW - Tube	
17						
18					----Lubricator to Air Comp. Cyl.----	
19				1	TUBE -- 1/4 O.D. x .035 x 190 Lg. - (S.D.Cop)	
20	C-9836		C-9836-P 1/4	1	TEE - Tube	
21				1	TUBE(Tee to Cam Side)--1/4 O.D. x .035 x 15 Lg. (S.D.Cop)	
22						
23				1	TUBE(Tee to Ex. Side)--1/4 O.D. x .035 x 30 Lg. (S.D.Cop)	
24						
25	C-9832		C-9832-P 1/4	2	ELBOW - Tube	
26						
27			S-2410	2	CLAMP - (7 Tube)	
28			S-1496	6	CLAMP - (6 Tube)	
29			S-1495	4	CLAMP - (5 Tube)	
30			S-1494	4	CLAMP - (4 TUBE)	
31			S-1493	4	CLAMP - (3 Tube)	
32			S-1492	4	CLAMP - (2 Tube)	
33				24	MACHINE SCREW -- 1/4-20 x 3/8 Lg.-Rnd. Hd.-(St.)	
34				24	NUT -- 1/4-20-NC-Hex. - - (St.)	
35						
36					----Fuel Transfer Pump Drain to Base ----	
37				1	TUBE -- 1/4 O.D. x .035 x 36 Lg. - - (S.D. Cop)	
38	C-9832		C-9832-P 1/4	1	ELBOW - Tube	
39			S-2811	1	CLAMP - 1/4 O.D. Tube	
40				1	MACHINE SCREW--1/4-20-NC x 1/2 Lg.-Rnd. Hd. - - (St.)	
41						
42						
43					----Spray Drain Manifold Drain (Not Piped)----	
44				1	PIPE PLUG -- 1/4 Std. (Brass)	
45						
46					----H.P. Fuel Pump Housing Drain (Not Piped)----	
47				1	STREET ELL -- 3/8 Std. (C.I.)	
48						
49						
50						

L-9695

FOR OPP. HAND SEE

FOR OPP. ROT. SEE

FORM 240 REV. 5-42 1M TRANS. 1M BOND

NAME LUBRICATOR & MISCELL. OIL PIPING GROUP

ORIGINALLY ISSUED FOR 6 CYL. 14 1/2 x 18 MARINE

FOR TOTAL REQUIREMENTS PER ENGINE MULTIPLY NO. REQ'D GIVEN ABOVE BY NO. REQ'D FOR GROUP GIVEN ON INDEX SHEET

PARTS LIST

ATLAS IMPERIAL DIESEL ENGINE CO.
OAKLAND, CALIF. MATTOON, ILL.

EXTRA COPIES TO

TYPED BY MED DATE 4/25/38 BY DA 4-25-38 CHKD. APRVD.

MASTER CATALOG CHANGES

#1 9-7-38 Piping Revised
#2 4-4-41 Line 35 Pipe Length was 18" - Line 36 Part No. Was C-9048-P1 - Removed Line 37 - Line 38 Length of Nipple Was 7"
#3 5-19-43 Added Union Fitt. Part Nos.

CHANGES

ALWAYS GIVE PART NUMBER—PART NAME—ENGINE NUMBER
FOR STD. HARDWARE WITHOUT PART NUMBER GIVE DESCRIPTION AND SIZE
* INDICATES PART NOT SERVICED INDIVIDUALLY

PLATE NO. L-9696

ASSEM. DRWG. NO. A-228

LINE NO.	DRWG. NO.	REF. NO.	*	PART NO.	NO. REQD.	PART NAME
1						-- Water Pump to Water Inlet Manifold --
2					1	Close Nipple -- 2½ Std. - - (Brass)
3					1	Elbow -- 2½ Std. Pipe - - (Brass)
4				C-9425	1	Pipe - Water Pump to Manifold
5	2C159			2C159-P2 1/2	1	Union
6					1	Nipple -- 2½ x 6 Lg. - - (Brass)
7					1	Tee -- 2½ x 2 x 2½ Std. Reducing - (Brass)
8					1	Close Nipple (Tee to Man.) -- 2½ Std. - - (Brass)
9						
10						-- Water Manifold Inlet Tee to Oil Cooler --
11					1	Street Ell -- 2 Std. - - (Brass)
12					1	Nipple -- 2 x 2½ Lg. - - (Brass)
13					1	Tee -- 2 x 1½ x 2 Std. Reducing - - (Brass)
14					1	Pipe Plug -- 2 Std. - - (Brass)
15					1	Close Nipple -- 1½ Std. - - (Brass)
16	2C159			2C159-P1 1/2	1	Union
17					1	Close Nipple -- 1½ Std. - - (Brass)
18	C-9054			C-9054-P1½	1	Cock - Three Way
19					1	Close Nipple -- 1½ Std. - - (Brass)
20					1	Tee -- 1½ x 1¼ x ⅜ Std. Reducing - - (Brass)
21					1	Pipe Plug -- ⅜ Std. - - (Brass)
22					1	Pipe -- 1¼ x 13½ Lg. - (Thr'd. 2 Ends) - (Brass)
23	2C162			2C162-P1 1/4	1	Union Elbow
24					1	Nipple -- 1¼ x 5½ Lg. - - (Brass)
25					1	Elbow -- 1¼ Std. - - - - (Brass)
26					1	Close Nipple -- 1 1/4 Std. - - (Brass)
27						-- Oil Cooler Water Outlet to Exhaust Manifold --
28					1	Nipple -- 1¼ x 2½ Lg. - - (Brass)
29					1	Tee -- 1¼ x 1¼ x ⅜ Std. Reducing - - (Brass)
30					1	Pipe Plug -- ⅜ Std. - - (Brass)
31					1	Nipple -- 1¼ x 3½ Lg. - - (Brass)
32	2C159			2C159-P1 1/4	1	Union
33					1	Close Nipple -- 1¼ Std. - - (Brass)
34					1	Tee -- 1¼ x 1 x 1 Std. Reducing - - (Brass)
35					1	Pipe -- 1 x 7 Lg. (Thr'd. 2 Ends) - - (Brass)
36	C-9049			C-9049-P1	1	Valve - Angle Globe
37						
38					1	Nipple -- 1 x 6 Lg. - - (Brass)
39	2C159			2C159-P1	1	Union
40					1	Nipple -- 1 x 2 Lg. - - (Brass)
41						
42						
43						
44						
45						
46						
47						
48						
49						
50						

FOR OPP. HAND SEE L-9699

FOR OPP. ROT. SEE

NAME WATER PIPING GROUP

ORIGINALLY ISSUED FOR 6 CYL. 14 1/2 x 18 MARINE - R.H.

FOR TOTAL REQUIREMENTS PER ENGINE MULTIPLY NO. REQ'D GIVEN ABOVE BY NO. REQ'D FOR THIS GROUP GIVEN ON INDEX SHEET

PARTS LIST

ATLAS IMPERIAL DIESEL ENGINE CO.
OAKLAND, CALIF. MATTOON, ILL.

FORM NO. 240-SM-10-37

L-9696

EXTRA COPIES TO

TYPED BY MED DATE 9-7-38 ISSUED BY [illegible] DATE 9-8-38 CHKD. [illegible] APRVD.

MASTER PARTS CATALOG CHANGES

#1 Retyped From Sheet Dated 4-25-38 - Piping Revised
#2 12-29-38 Added Tube Fitting Part Nos
#3 5-19-43 Added Union Fitt. Part Nos.

CHANGES

ALWAYS GIVE PART NUMBER—PART NAME—ENGINE NUMBER
FOR STD. HARDWARE WITHOUT PART NUMBER GIVE DESCRIPTION AND SIZE
* INDICATES PART NOT SERVICED INDIVIDUALLY

PLATE NO. L-9697

ASSEM. DRWG. NO. A-228

LINE NO.	DRWG. NO.	REF. NO.	*	PART NO.	NO. REQD.	PART NAME
1						--Oil Cooler Water Out. Line to Exh. Val. Cage--
2					1	CLOSE NIPPLE -- 1 Std. - - - (Brass)
3	2C162			2C162-P1	1	UNION ELBOW
4					1	NIPPLE -- 1 x 2 1/2 Lg. -- (Brass)
5	C-9068			C-9068-P1¼	1	CHECK VALVE
6					2	REDUCING BUSHING -- 1¼ x 1 Std. - (Brass)
7					1	NIPPLE -- 1 x 5 Lg. -- (Brass)
8					1	TEE -- 1½ x 1 x 1 Std. Reducing - - (Brass)
9					1	NIPPLE(Tee to 3 Way Cock)--1½ x 2½ Lg.-(Brass)
10					1	CLOSE NIPPLE -- 1 Std. - - (Brass)
11	C-9053			C-9053-P1	1	COCK - Shut-off
12					1	CLOSE NIPPLE -- 1 Std. - - (Brass)
13	2C159			2C159-P1	1	UNION
14					1	PIPE(To Val. Cage Man.)--1 x 35 Lg. (Thr'd. 2
15						Ends)-(Brass)
16	2C162			2C162-P1	1	UNION ELBOW
17					1	NIPPLE -- 1 x 4 Lg. - - (Brass)
18	F-5815			X2586	1	MANIFOLD ASSEM. - Exh. Valve Cage Water (Inlet)
19					2	PIPE PLUG -- 1 Std. - - (Brass)
20	F-5817			X2588	1	MANIFOLD ASSEM.-Exh. Valve Cage Water (Outlet)
21					1	PIPE PLUG -- 1 Std. - - (Brass)
22					1	PIPE PLUG -- ¼ Std. - - (Brass)
23	F-141			4577	4	BRACKET - Exhaust Valve Cage Water Manifolds
24					8	CAPSCREW -- 3/8-16-NC x 7/8 Lg. - - (Steel)
25					8	LOCKWASHER -- 3/8 SAE Reg. -- (Steel)
26	F-141			4578	4	CAP - Exhaust Valve Cage Water Manifold Bracket
27					12	CAPSCREW -- 3/8-16-NC x 2¼ Lg. - (Steel)
28					12	NUT -- 3/8-16-NC-Hex. -- (Steel)
29					6	TUBE(Man. to Cage) -- 3/8 O.D. x .035 x 21 Lg. -
30						(S.D. Copper)
31					6	TUBE(Cage to Cage) -- 3/8 O.D. x .035 x 12 Lg. -
32						(S.D. Copper)
33					6	TUBE(Cage to Man.) -- 3/8 O.D. x .035 x 15 Lg. -
34						(S.D. Copper)
35	C-9817			C-9817-P 3/8	36	CONNECTOR - (Tube Fitting)
36	C-9816			C-9816-P 3/8	36	NUT -(Tube Fitting)
37						
38						
39						
40						
41						
42						
43						
44						
45						
46						
47						
48						
49						
50						

FOR OPP. HAND SEE L-9700

FOR OPP. ROT. SEE

NAME WATER PIPING GROUP

ORIGINALLY ISSUED FOR 6 Cyl. 14 1/2 x 18 MARINE -RH

FOR TOTAL REQUIREMENTS PER ENGINE MULTIPLY NO. REQ'D GIVEN ABOVE BY NO. REQ'D FOR THIS GROUP GIVEN ON INDEX SHEET

PARTS LIST

ATLAS IMPERIAL DIESEL ENGINE CO.
OAKLAND, CALIF. MATTOON, ILL.

FORM NO. 240-3M-10-37

L-9697

EXTRA COPIES TO _____ TYPED BY MED DATE 4/25/38 ISSUED BY _____ DATE 4-25-38 CHKD. _____ APRVD. _____

MASTER PARTS CATALOG

CHANGES #1 9-7-38 Revised Adding Lengths
#2 12-29-38 Added Tube Fitting Part Nos.
#3 4-4-41 Line 45 Length of Pipe was 23" - Line 47 Was 1⅛" Std. Close Nipple
#4 5-19-43 Added Union Fitt. Part Nos.

CHANGES

ALWAYS GIVE PART NUMBER—PART NAME—ENGINE NUMBER
FOR STD. HARDWARE WITHOUT PART NUMBER GIVE DESCRIPTION AND SIZE
* INDICATES PART NOT SERVICED INDIVIDUALLY

PLATE NO. L-9698

ASSEM. DRWG. NO. A-228

LINE NO.	DRWG. NO.	REF. NO.	*	PART NO.	NO. REQD.	PART NAME
1						-- Water Inlet Manifold to Cyl. Head(Spray Valve Cool.)--
2					1	Nipple -- 1 x 2 Lg. - - (Brass)
3					1	Elbow -- 1 Std. - - (Brass)
4					1	Nipple -- 1 x 6½ Lg. - - (Brass)
5	C-9049			C-9049-P1¼	1	Valve - Angle Globe
6					2	Reducing Bushing -- 1¼ x 1 Std. - (Brass)
7					1	Nipple -- 1 x 6½ Lg. - - (Brass)
8	2C162			2C162-P1	1	Union Elbow
9					1	Close Nipple -- 1 Std. - - (Brass)
10	W-1302			X2590	1	Manifold Assembly - Cylinder Head & Spray Valve Cooling
11					1	Pipe Cap -- 1 Std. - - (Brass)
12					1	Reducer -- 1 x ⅜ Std. Bell - - (Brass)
13				F-5383	4	Bracket - Cyl. Head & Spray Valve Cooling Manifold
14					8	Capscrew -- ⅜-16-NC x ¾ Lg. - - (Steel)
15					8	Lockwasher -- 3/8 SAE Reg. - - (Steel)
16				C-8267	4	Cap - Manifold Bracket
17					8	Capscrew -- ⅜-16-NC x 1 Lg. - - (Steel)
18					8	Nut --⅜-16-NC-Hex. - - (Steel)
19					6	Tube -- ⅜ O.D. x .049 x 19 Lg. - - (H.D. Copper)
20					5	Tube -- ⅜ O.D. x .049 x 41 Lg. - - (H.D. Copper)
21	C-9817			C-9817-P 1/2	12	Connector - (Tube Fitting)
22	C-9821			C-9821-P 1/2	12	Elbow - (Tube Fitting)
23	C-9816			C-9816-P 1/2	24	Nut -(Tube Fitting)
24					1	Tube -- 1/2 O.D. x .049 x 47 Lg. - (H.D. Copper)
25						-- Water Inlet Manifold to Air Compressor --
26					1	Nipple -- ¾ x 2 Lg. - - (Brass)
27					1	Elbow -- ¾ Std. - - (Brass)
28				C-9502	1	Pipe - Manifold to Air Compressor Water
29					1	Elbow -- ¾ Std. - - (Brass)
30					1	Nipple -- ¾ x 5½ Lg. - - (Brass)
31					1	Elbow -- ¾ Std. - - (Brass)
32					1	Nipple -- ¾ x 2 Lg. - - (Brass)
33						
34						-- Air Compressor Water Outlet to Exhaust Manifold --
35					1	Close Nipple -- 1 Std. - - (Brass)
36					1	Elbow -- 1 Std. - - (Brass)
37				C-9504	1	Pipe - Air Compressor Water Outlet
38	2C162			2C162-P1	1	Union Elbow
39					1	Close Nipple -- 1 Std. - - (Brass)
40						
41						-- Bilge Pump to Water Inlet Manifold --
42					1	Reducing Bushing -- 2 x 1⅛ Std. - - (Brass)
43					1	Pipe -- 1⅛ x 11¼ Lg.(Thr'd. 2 Ends) - (Brass)
44	2C162			2C162-P1 1/2	1	Union Elbow
45					1	Pipe -- 1⅛ x 26½ Lg.(Thr'd. 2 Ends) - (Brass)
46	2C159			2C159-P1 1/2	1	Union
47					1	Nipple -- 1 1/2 x 6 Lg. - (Brass)
48	C-9054			C-9054-P2	1	Cock - Three Way
49					3	Reducing Bushing -- 2 x 1⅛ Std. - (Brass)
50				C-9426	1	Pipe - Three Way Cock to Water Inlet Manifold

FOR OPP. HAND SEE L-9701

FOR OPP. ROT. SEE

NAME WATER PIPING GROUP

ORIGINALLY ISSUED FOR 6 CYL. 14 1/2 x 18 MARINE - R.H.

FOR TOTAL REQUIREMENTS PER ENGINE MULTIPLY NO. REQ'D GIVEN ABOVE BY NO. REQ'D FOR THIS GROUP GIVEN ON INDEX SHEET

PARTS LIST

ATLAS IMPERIAL DIESEL ENGINE CO.
OAKLAND, CALIF. MATTOON, ILL.

FORM NO. 240-3M-10-37

L-9698

EXTRA COPIES TO:

TYPED BY MED DATE 4/26/38 ISSUED BY [illegible] DATE 4-8-38 CHKD. [illegible] APRVD. [illegible]

MASTER PARTS CATALOG CHANGES

#1 6/8/38 Retyped - Adding Part Nos. C-9563 & C-9562 Also One 3/8-16 Capscrew
#2 8-4-38 Added Pipe & Tube Lengths Lines 2-6 8-22-31-33-37-41
#3 12-29-38 Tube Fitting Part No. Added
#4 4-4-41 Line 41 Was 1¼ x 3 Lg. Nipple
5-19-43 Added Union Fitt. Part Nos.

CHANGES: Changed Brass to W.I.

ALWAYS GIVE PART NUMBER—PART NAME—ENGINE NUMBER
FOR STD. HARDWARE WITHOUT PART NUMBER GIVE DESCRIPTION AND SIZE
* INDICATES PART NOT SERVICED INDIVIDUALLY

PLATE NO. L-9702

ASSEM. DRWG. NO. A-228

LINE NO.	DRWG. NO.	REF. NO.	*	PART NO.	NO. REQD.	PART NAME
1						-- Pump to Four Way Cock (At Cooler) --
2					1	Nipple -- 1¼ x 4 Lg. - - (W.I.)
3					1	Elbow -- 1¼ - 45° Std. - - (M.I.)
4					1	Close Nipple -- 1¼ Std. - - (W.I.)
5	2C160			2C160-P1 1/4	1	Union Elbow
6					1	Pipe -- 1¼ x 33⅜ Lg. (Thr'd. 2 Ends) - - (W.I.)
7					1	Elbow -- 1¼ Std. - - (M.I.)
8					1	Pipe -- 1¼ x 11⅛ Lg. (Thr'd. 2 Ends) - - (W.I.)
9	2C160			2C160-P1 1/4	1	Union Elbow
10				C-9422	1	Pipe - Union Elbow to Four Way Cock
11	2C157			2C157-P1 1/4	1	Union
12					1	Close Nipple -- 1¼ Std. - - (W.I.)
13	C-9055			C-9055-P1⅛	1	Cock - Four Way
14					4	Reducing Bushing -- 1⅛ x 1¼ Std. - - (C.I.)
15				C-9563	1	Clamp - Pipe to Centerframe
16				C-9562	1	Spacer - Pipe Clamp
17					1	Capscrew -- 3/8-16-NC x 7/8 Lg. - - (Steel)
18						-- Four Way Cock to Cooler (Inlet) --
19					1	Close Nipple -- 1¼ Std. - - (W.I.)
20					1	Tee -- 1¼ x ⅛ x 1¼ Std. Reducing - - (M.I.)
21					1	Pipe Plug -- ⅛ Std. - - (C.I.)
22					1	Nipple -- 1¼ x 6½ Lg. -- (W.I.)
23	2C160			2C160-P1 1/4	1	Union Elbow
24					1	Nipple -- 1¼ x 2 Lg. - - (W.I.)
25						-- Cooler to Four Way Cock (Cooler Out.) --
26					1	Nipple -- 1¼ x 2 Lg. - - (W.I.)
27	2C160			2C160-P1 1/4	1	Union Elbow
28					1	Nipple -- 1¼ x 6 Lg. - - (W.I.)
29					1	Tee -- 1¼ x ⅛ x 1¼ Std. Reducing - - (M.I.)
30					1	Pipe Plug -- ⅛ Std. - - (C.I.)
31					1	Nipple -- 1¼ x 2⅛ Lg. - (W.I.)
32	2C160			2C160-P1 1/4	1	Union Elbow
33					1	Nipple -- 1¼ x 10¾ Lg. - (W.I.)
34						-- Four Way Cock to Manifold Connect. at Base --
35					1	Nipple -- 1¼ x 4 Lg. - - (W.I.)
36					1	Tee -- 1¼ x 1¼ x ⅜ Std. Reducing - - (M.I.)
37					1	Nipple -- 1¼ x 4 Lg. - - (W.I.)
38	2C160			2C160-P1 1/4	1	Union Elbow
39				C-9424	1	Pipe - Elbow to Man. Connect. at Base
40					1	Elbow -- 1¼ Std. - - (M.I.)
41					1	Close Nipple -- 1 1/4" Std. - (W.I.)
42	2C160			2C160-P1 1/4	1	Union Elbow
43						-- Oil Cooler Outlet Line to Pressure Gage --
44					1	Reducing Bushing -- ⅜ x ⅛ Std. - - (C.I.)
45					1	Tube -- ¼ O.D. x .035 x 200 Lg. -(S.D. Copper)
46	C-9801			C-9801-P 1/4	2	Connector - (Tube Fitting)
47				S-2811	4	Clamp - ¼ O.D. Tube
48					4	Machine Screw--¼-20-NC x ⅛ Lg.-Rnd. Hd.-(Steel)
49						
50						

L-9702

FOR OPP. HAND SEE

FOR OPP. ROT. SEE

NAME LUBE OIL PRESSURE PIPING GROUP

ORIGINALLY ISSUED FOR 6 CYL. 14 1/2 x 18 MARINE

FOR TOTAL REQUIREMENTS PER ENGINE MULTIPLY NO. REQ'D GIVEN ABOVE BY NO. REQ'D FOR THIS GROUP GIVEN ON INDEX SHEET

PARTS LIST

ATLAS IMPERIAL DIESEL ENGINE CO.
OAKLAND, CALIF. MATTOON, ILL.

FORM NO. 240-3M-10-37

EXTRA COPIES TO

TYPED DATE 4/26/38 ISSUED BY DATE 4-26-38 CHKD. APRVD.

CHANGES

#1 8-4-38 Added Tube, Pipe & Nipp Lengths Lines 7-21-27-31-33-40
#2 9-7-38 Piping Revised
#3 12-29-38 Added Tube Fitting Part Nos.
#4 1-23-42 Piping Revised
#5 5-19-43 Added Union Fitt. Part No.

Changed Brass to W.I.

ALWAYS GIVE PART NUMBER—PART NAME—ENGINE NUMBER
FOR STD. HARDWARE WITHOUT PART NUMBER GIVE DESCRIPTION AND SIZE
* INDICATES PART NOT SERVICED INDIVIDUALLY

PLATE NO. L-9703

ASSEM. DRWG. NO. A-228

LINE NO.	DRWG. NO.	REF. NO.	*	PART NO.	NO. REQD.	PART NAME
1						-- Oil Pump Discharge to Oil Filter --
2					1	Reducing Bushing -- 1¼ x ½ Std. - - (C.I.)
3					1	Nipple -- ½ x 2 Lg. - - (W.I.)
4					1	Elbow -- ½ Std. - - (M.I.)
5					1	Nipple -- ½ x 1½ Lg. - - (W.I.)
6	2C160			2C160-P 1/2	1	Union Elbow
7					1	Pipe -- ½ x 13 Lg. (Thr'd. 2 Ends) - (W.I.)
8	2C160			2C160-P 1/2	1	Union Elbow
9					1	Close Nipple -- ½ Std. - - (W.I.)
10				C-8355	1	Bracket - Lube Oil Filter
11					2	Capscrew -- ½-13-NC x 1 Lg. - - (Steel)
12					2	Lockwasher -- ½ SAE Reg. - (Steel)
13				PG 81	1	Filter - Lube Oil
14					2	Reducing Bushing -- 1 x ½ Std. - - (C.I.)
15					2	Capscrew -- ½-13-NC x 1½ Lg. - - (Steel)
16					2	Nut -- ½-13-NC-Hex. - - (Steel)
17					2	Lockwasher -- ½ SAE Reg. - - (Steel)
18						-- Oil Filter to Man. Connect. at Latch Box --
19					1	CLOSE NIPPLE -- 1/2 Std. - (W.I.)
20					1	TEE -- 1/2 x 1/4 x 1/2 Std. Reducing -(M.I.)
21	C-9801			C-9801-P 5/8	1	CONNECTOR - Tube
22					1	TUBE -- 5/8 O.D. x .049 x 17 1/2 Lg(S.D. Cop.)
23	C-9801			C-9801-P 5/8	1	CONNECTOR - Tube
24					1	TEE -- 1/2 x 1/4 x 1/2 Std. Reducing -(M.I.)
25						-- Tee to Pumps & H.P. Fuel Pump Crank. Fwd. Bear. --
26	C-9804			C-9804-P 3/8	1	Elbow - (Tube Fitting)
27					1	Tube -- ⅜ O.D. x .035 x 13½ Lg. - - (S.D. Copper)
28	C-9801			C-9801-P 3/8	1	Connector - (Tube Fitting)
29					1	Tee -- ¼ Std. - - (M.I.)
30					1	Reducing Bushing -- ¼ x ⅛ Std. - - (C.I.)
31					1	Tube (Lube Pump) -- ¼ O.D. x .035 x 14 Lg.-(S.D. Copp
32	C-9804			C-9804-P 1/4	2	Elbow - (Tube Fitting)
33					1	Tube(L.P. Fuel Pump)--⅜ O.D. x .035 x 7 Lg.-(S.D. Copper
34	C-9801			C-9801-P 3/8	1	Connector - (Tube Fitting)
35	C-9804			C-9804-P 3/8	1	Elbow - (Tube Fitting)
36					1	Tee -- ¼ x ⅛ x ⅛ Std. Reducing - - (M.I.)
37					1	Nipple(To L.P. Fuel Pump Brg.)--⅛ x 2 Lg. - (W.I.)
38					1	Reducing Bushing -- ¼ x ⅛ Std. - - (C.I.)
39	C-9804			C-9804-P 1/4	1	Elbow - (Tube Fitting)
40					1	Tube(Fuel Pump Crank Brg.)--¼O.D.x.035 x14 Lg.(S.D. Copper
41	C-9805			C-9805-P 1/4	1	Elbow - (Tube Fitting)
42					1	Nipple -- ⅛ x 1½ Lg. - - (W.I.)
43				S-2810	2	Clamp - ⅜ O.D. Tube
44				S-2811	2	Clamp - ¼ O.D. Tube
45					4	Machine Screw--¼-20 x ⅜ Lg. - Rnd. Hd. - (Steel)
46						
47						
48						
49						
50						

L-9703

FOR OPP. HAND SEE

FOR OPP. ROT. SEE

NAME LUBE OIL PRESSURE PIPING GROUP

ORIGINALLY ISSUED FOR 6 CYL. 14 1/2 x 18 MARINE

FOR TOTAL REQUIREMENTS PER ENGINE MULTIPLY NO. REQ'D GIVEN ABOVE BY NO. REQ'D FOR THIS GROUP GIVEN ON INDEX SHEET

PARTS LIST

ATLAS IMPERIAL DIESEL ENGINE CO.
OAKLAND, CALIF. MATTOON, ILL.

EXTRA COPIES TO

TYPED BY HAW DATE 1-23-42 ISSUED BY [illegible] DATE 1-26-42 CHKD. [illegible] APRVD. [illegible]

CHANGES

#4 Revised & Retyped from 4-26-38
#5 5-19-43 Added Union Fitt. Part No. Changed Mat'l. for Pipe & Nipples from Brass to W.I.

CHANGES

L-9704

ALWAYS GIVE PART NUMBER—PART NAME—ENGINE NUMBER
FOR STD. HARDWARE WITHOUT PART NUMBER GIVE DESCRIPTION AND SIZE
* INDICATES PART NOT SERVICED INDIVIDUALLY

PLATE NO. A-228

LINE NO.	DRWG. NO.	REF. NO.	*	PART NO.	NO. REQD.	PART NAME	ASSEM. DRWG. NO.
1				--- Filter Out.		Line Tee at Latch Box to Cam. Brgs. ---	
2					1	CLOSE NIPPLE -- 1/2 Std. -- (W.I.)	
3					1	NIPPLE -- 1/2 x 3 Lg. -- (W.I.)	
4	2C160			2C160-P 1/2	1	UNION ELBOW	
5					1	NIPPLE -- 1/2 x 4 Lg. -- (W.I.)	
6					1	TEE -- 1/2 x 1/2 x 1/8 Std Reducing -- (M.I.)	
7	C-9804			C-9804-P 1/4	1	ELBOW - Tube	
8					1	TUBE(Cam Fwd Brg)--1/4 OD x .030x11 1/2 Lg(SD Cop)	
9	C-9804			C-9804-P 1/4	1	ELBOW - Tube	
10					1	NIPPLE -- 1/2 x 5 Lg -- (W.I.)	
11	F-5805			X2572	1	MANIFOLD ASSEM. - Cam. Bearing Oil	
12					1	PIPE PLUG -- 3/8 Std Ctsk. Hd -- (C.I.)	
13				C-9443	4	CLAMP - Manifold	
	C-2406			C-2406L 1/2	4	CAPSCREW - Clamp to Centerframe	
15					4	WIRE -- 16 GA. x 10 Lg -- (St.)	
16					6	REDUCING BUSHING -- 1/4 x 1/8 Std -- (C.I.)	
17	C-9801			C-9801-P 1/4	5	CONNECTOR - Tube	
18					5	TUBE -- 1/4 O.D. x .030 x 15 Lg -- (SD Cop.)	
	C-9804			C-9804-P 1/4	5	ELBOW - Tube	
20				--- Cam. Brg. Manifold to Cam. Brg. Opp. Governor ---			
21	C-9801			C-9801-P 1/4	1	CONNECTOR - Tube	
22					1	TUBE -- 1/4 O.D. x .030 x 7 Lg -- (SD Cop.)	
23	C-9809			C-9809-P 1/4	1	TEE - Tube (3 Tubes)	
24					1	TUBE(To Cam Brg.) -- 1/4 OD x .030 x 8 Lg (SD Cop.)	
25	C-9804			C-9804-P 1/4	1	ELBOW - Tube	
26				--- Tube Fitt.		Tee on Cam. Brg. Line to Governor ---	
27					1	TUBE -- 1/4 O.D. x .030 x 30 Lg --(S.D. Cop.)	
28	C-9808			C-9808-P 1/4	1	TEE - Tube (2 Tubes)	
29				---Gov. Tube		Tee to Sump Pump Bearing	
30					1	TUBE -- 1/4 OD x .030 x 20 Lg -- (S.D. Cop.)	
31	C-9832			C-9832-P 1/4	1	ELBOW - Tube	
32				-- Cam. Brg.		Man. to End Cam. Bearing (Gov. End)	
33					1	REDUCING BUSHING -- 3/8 x 1/8 Std -- (C.I.)	
34	C-9801			C-9801-P 1/4	1	CONNECTOR - Tube	
35					1	TUBE -- 1/4 OD x .030 x 24 Lg -- (S.D. Cop.)	
36	C-9804			C-9804-P 1/4	1	ELBOW - Tube	
37				S-2811	2	CLAMP - Gov. & Cam. Brg. Tube	
38					2	MACHINE SCREW --1/4-20 NC x 1/2 Lg.Rnd.Hd.-(St.)	
39				--- Filter Out.		Tee to Valve Lifter Guides ---	
40	C-9804			C-9804-P 3/8	1	ELBOW - Tube	
41					1	TUBE -- 3/8 O.D. x .035 x 25 Lg -- (S.D. Cop.)	
42	C-9805			C-9805-P 3/8	1	ELBOW - Tube (Female)	
43	F-6739			X3458	1	MANIFOLD ASSEM. - Valve Lifter Oil	
44					1	ELBOW -- 1/4 x 1/8 Std Reducing --(M.I.)	
45				S-2809	6	CLAMP - Manifold to Cylinder	
46					6	MACHINE SCREW -- 1/4-20 x 1/2 Lg Rnd.Hd.(St.)	
47	C-9801			C-9801-P 1/4	12	CONNECTOR - Tube	
48					12	TUBE -- 1/4 OD x .030 x 6 Lg -- (S.D. Cop.)	
				2C2828	12	CONNECTOR - Tube (Restricted)	
50							

L-9704

FOR OPP. HAND SEE

FOR OPP. ROT. SEE

NAME LUBE OIL PRESSURE PIPING GROUP

ORIGINALLY ISSUED FOR 6 CYL. 14 1/2 x 18 MARINE

FOR TOTAL REQUIREMENTS PER ENGINE MULTIPLY NO. REQ'D GIVEN ABOVE BY NO. REQ'D FOR THIS GROUP GIVEN ON INDEX SHEET

PARTS LIST

ATLAS IMPERIAL DIESEL ENGINE CO.
OAKLAND, CALIF. MATTOON, ILL.

FORM NO. 240 10-38

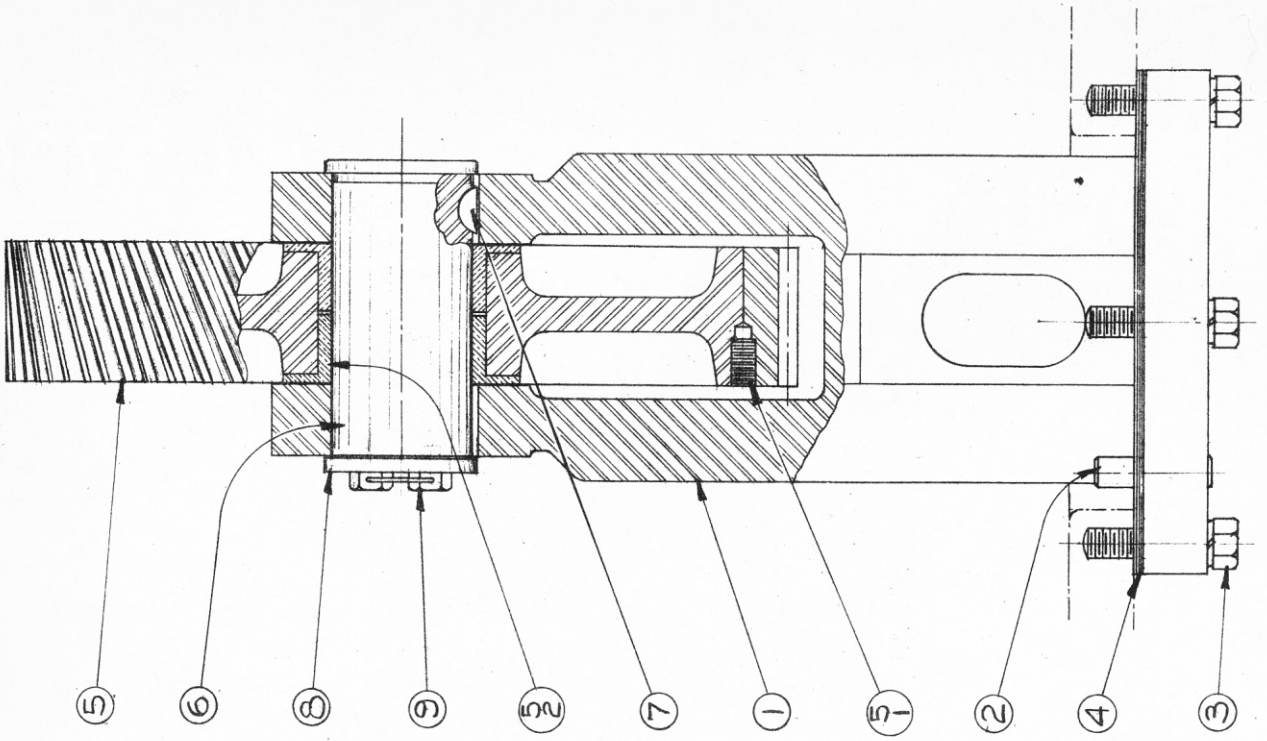

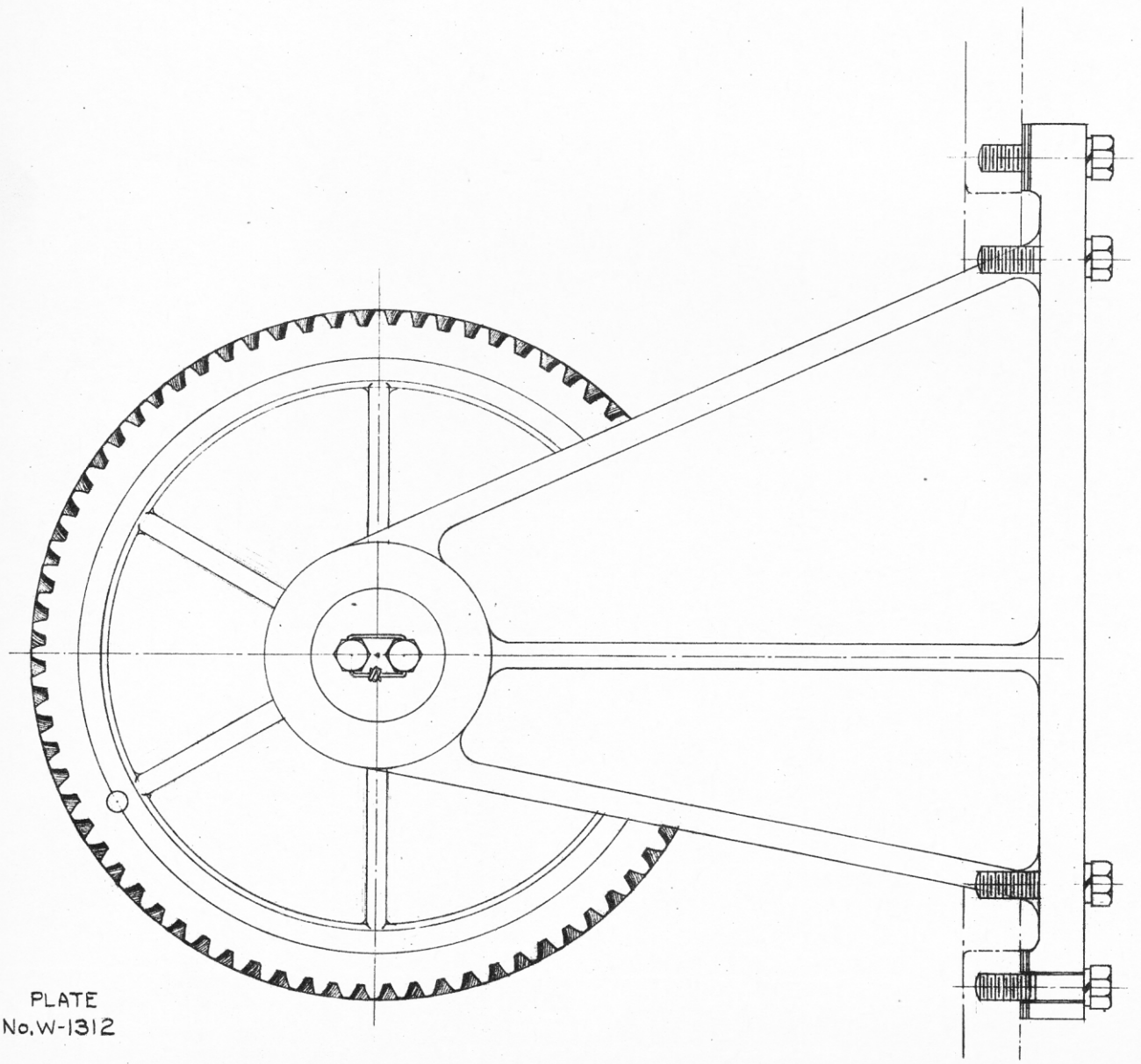

PLATE
No. W-1312

EXTRA COPIES TO

TYPED BY DJA DATE 2/2/43 CHKD DATE 2-10-43 ISSUED APRVD.

CHANGES #1 Retyped from 5/16/38 (No Changes)

CHANGES

ALWAYS GIVE PART NUMBER—PART NAME—ENGINE NUMBER
FOR STD. HARDWARE WITHOUT PART NUMBER GIVE DESCRIPTION AND SIZE
* INDICATES PART NOT SERVICED INDIVIDUALLY

L-9706

PLATE NO. W-1312

LINE NO.	DRWG. NO.	REF. NO.	PART NO.	NO. REQD.	PART NAME	ASSEM. DRWG. NO.
1		1	K-1309	1	BRACKET - Intermediate Gear	
2		2	C-5153	2	PIN - Bracket to Centerframe Dowel	
3		3		10	CAPSCREW -- 5/8-11-NC x 2 3/4 Lg. - - (St.)	
4		3		10	LOCKWASHER -- 5/8 SAE Reg. - - (St.)	
5	C-8203	4	C-8203-A	4	SHIM - Bracket to Centerframe - (1/16)	
6	C-8203	4	C-8203-B	6	SHIM - Bracket to Centerframe - (1/32)	
7	C-8203	4	C-8203-D	4	SHIM - Bracket to Centerframe - (.010)	
8	C-8203	4	C-8203-E	8	SHIM - Bracket to Centerframe - (.003)	
9						
10	F-5833	5	X2607	1	GEAR ASSEMBLY - Intermediate	
11		6	C-8201	1	PIN - Intermediate Gear	
12		7		1	WOODRUFF KEY -- 1/4 x 1 Std. - - (St.)	
13		8	C-8202	1	WASHER - Int. Gear Pin Retainer	
14	C-2408	9	C-2408L 7/8	2	CAPSCREW - Washer to Int. Gear Pin	
15				1	WIRE -- #16 Ga. x 5 Lg. - - (St.)	
16						
17						
18						
19						
20						
21						
22						
23						
24						
25						
26						
27						
28						
29						
30						
31						
32						
33						
34						
35						
36						
37						
38						
39						
40						
41						
42						
43						
44						
45						
46						
47						
48						
49						
50						

FOR OPP. HAND SEE

FOR OPP. ROT. SEE

NAME INTERMEDIATE GEAR GROUP

ORIGINALLY ISSUED FOR 6 CYL. 14 1/2 x 18 MAR.-STAT.

FOR TOTAL REQUIREMENTS PER ENGINE MULTIPLY NO. REQ'D GIVEN ABOVE BY NO. REQ'D FOR GROUP GIVEN ON INDEX SHEET

FORM 240 REV. 5-42 1M TRANS. 1M BOND

PARTS LIST

ATLAS IMPERIAL DIESEL ENGINE CO.
OAKLAND, CALIF. MATTOON, ILL.

L-9706

PLATE
No. K-1613

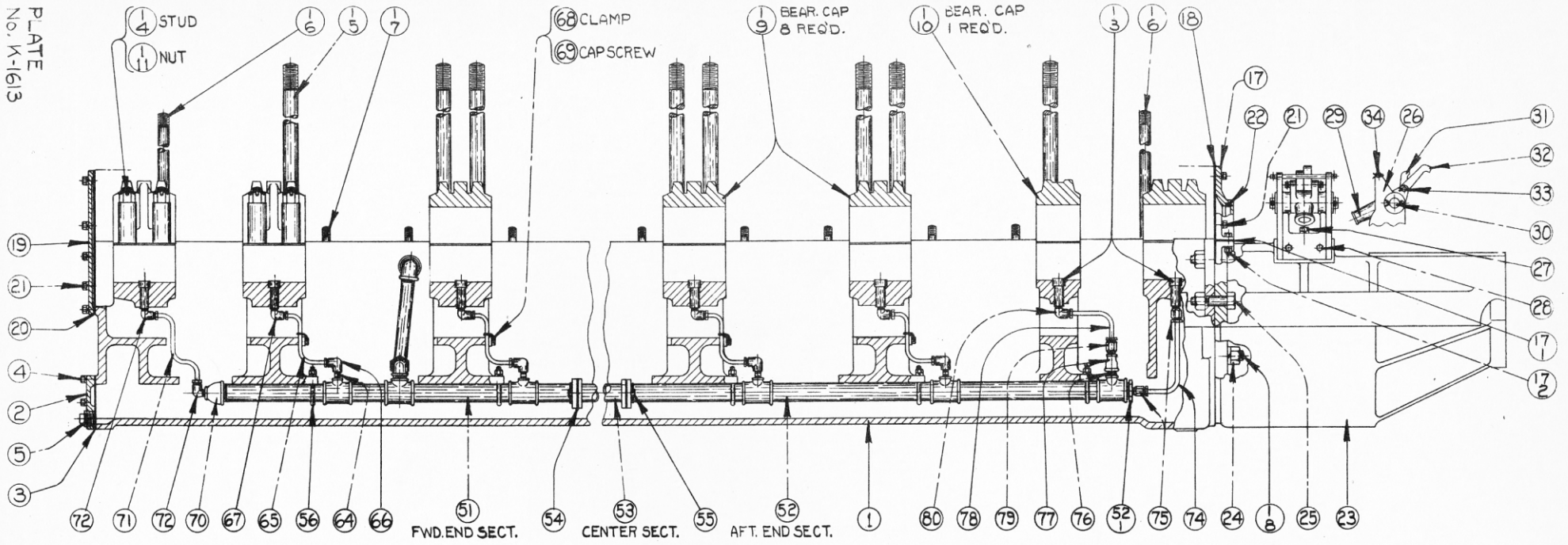

DO NOT ORDER PARTS BY REF. NUMBERS

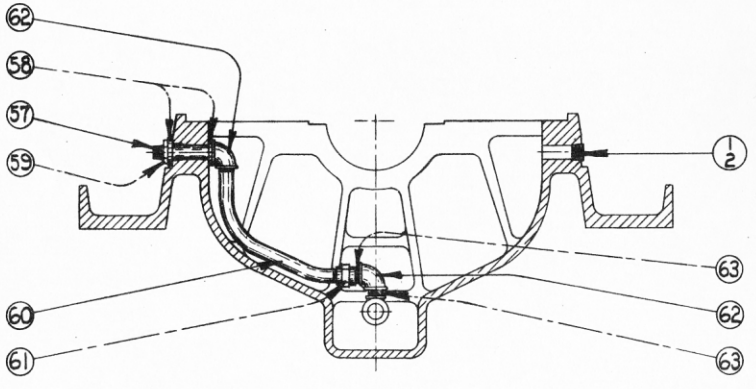

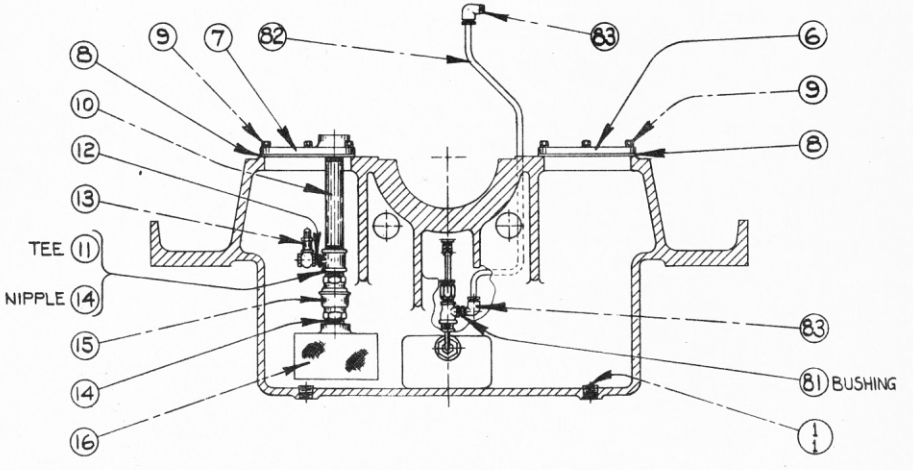

EXTRA COPIES TO

TYPED BY DJA DATE 2/2/43 CHKD. DATE 2-10-43 ISSUED BY APRVD.

CHANGES: Retyped from 7/5/38 (No Changes)
#4 5-19-43 Added Union Fitt. Part Nos.

CHANGES

ALWAYS GIVE PART NUMBER—PART NAME—ENGINE NUMBER
FOR STD. HARDWARE WITHOUT PART NUMBER GIVE DESCRIPTION AND SIZE
* INDICATES PART NOT SERVICED INDIVIDUALLY

L-9710

PLATE NO. K-1613

ASSEM. DRWG. NO. K-1453

LINE NO.	DRWG. NO.	REF. NO.	PART NO.	NO. REQD.	PART NAME
1	F-5335	51	X2166	1	MANIFOLD ASSEMBLY - Lube Oil -(Inlet End Sect.)
2	F-5333	52	X2169	1	MANIFOLD ASSEMBLY - Lube Oil -(Gear End Sect.)
3	F-5334	53	X2165	1	MANIFOLD ASSEMBLY - Lube Oil - (Center Sect.)
4		54	C-849	2	GASKET - Manifold Flange
5	C-2410	55	C-2410L1 3/4	4	CAPSCREW - Manifold Flange
6				4	LOCKWASHER -- 5/8 SAE Reg. - - (St.)
7				2	WIRE -- #16 Ga. x 14 Lg. - - (St.)
8		56	C-8138	7	U-BOLT - Manifold to Base
9		56		14	NUT -- 1/2-13-NC-Hex. - - (St.)
10				14	LOCKWASHER -- 1/2 SAE Reg. - - (St.)
11					
12					-- Base to Manifold Oil Line (Manifold Inlet)--
13		57	C-6430	1	NIPPLE - Lube Oil Connection (Thru Base)
14		58	C-8184	2	WASHER - Lube Oil Nipple Seal
15	C-5145	59	367-7	1	LOCKNUT - Lube Oil Nipple
16		60		1	PIPE -- 1 1/4 x 22 Lg.(Thread Both Ends)(W.I.)
17	2C157	61	2C157-P1 1/4	1	UNION
18		62		2	ELBOW -- 1 1/4 Std. - - (M.I.)
19		63		2	CLOSE NIPPLE -- 1 1/4 Std. - - (W.I.)
20					-- Manifold Outlet to Crank. Bearings (Int.)--
21		64		6	NIPPLE -- 1/2 x 2 Lg. - - (W.I.)
22		65	C-9517	6	TUBE - Manifold to Bearing
23	C-9805	66	C-9805-P 5/8	6	ELBOW - (Tube Fitting) -(Female)
24	C-9804	67	C-9804-P 5/8	6	ELBOW - (Tube Fitting) -(Male)
25		68	C-9518	6	CLAMP - Tube to Base
26	C-2406	69	C-2406L 5/8	6	CAPSCREW - Tube Clamp to Base
27				6	WIRE -- #16 Ga. x 6 Lg. - - (St.)
28					--Manifold Outlet to Crank. Bearing (Fwd. End)
29		70		1	REDUCER -- 2 x 1/2 Std. - - (C.I.)
30		71		1	TUBE -- 5/8 O.D. x .049 x 16 Lg. - - (H.D. Copper
31	C-9804	72	C-9804-P 5/8	2	ELBOW - (Tube Fitting) - (Male)
32					
33					-- Manifold Outlet to Crank. Bearing (Aft. End)
34		74		1	TUBE -- 5/8 O.D. x .049 x 16 Lg.-(H.D. Copper)
35	C-9801	75	C-9801-P 5/8	2	CONNECTOR - (Tube Fitting)
36					-- Manifold Outlet to Crank. Short Bearing --
37		76		1	NIPPLE -- 3/4 x 2 Lg. - - (W.I.)
38		77		1	TEE -- 3/4 x 1/2 x 1/2 Std. Reducing - (M.I.)
39		78		1	TUBE -- 5/8 O.D. x .049 x 12 Lg. (H.D. Copper)
40	C-9801	79	C-9801-P 5/8	1	CONNECTOR - (Tube Fitting)
41	C-9804	80	C-9804-P 5/8	1	ELBOW - (Tube Fitting)
42					-- Short Brg. Outlet Tee to Int. Gear Brg. --
43		81		1	REDUCING BUSHING--1/2 x 3/8 Std. (C.I.)
44		82		1	TUBE -- 1/2 O.D.x.049 x 52 Lg.(S.D. Copper)
45	C-9804	83	C-9804-P 1/2	2	ELBOW - (Tube Fitting)
46					
47					
48					
49					
50					

L-9710

FOR OPP. HAND SEE

FOR OPP. ROT. SEE

NAME LUBE OIL MANIFOLD & BASE PIPING GROUP

ORIGINALLY ISSUED FOR 6 CYL. 14½x18 - 15x19 MARINE

FOR TOTAL REQUIREMENTS PER ENGINE MULTIPLY NO. REQ'D GIVEN ABOVE BY NO. REQ'D FOR GROUP GIVEN ON INDEX SHEET

FORM 240 REV. 5-42 1M TRANS. 1M BOND

PARTS LIST

ATLAS IMPERIAL DIESEL ENGINE CO.
OAKLAND, CALIF. MATTOON, ILL.

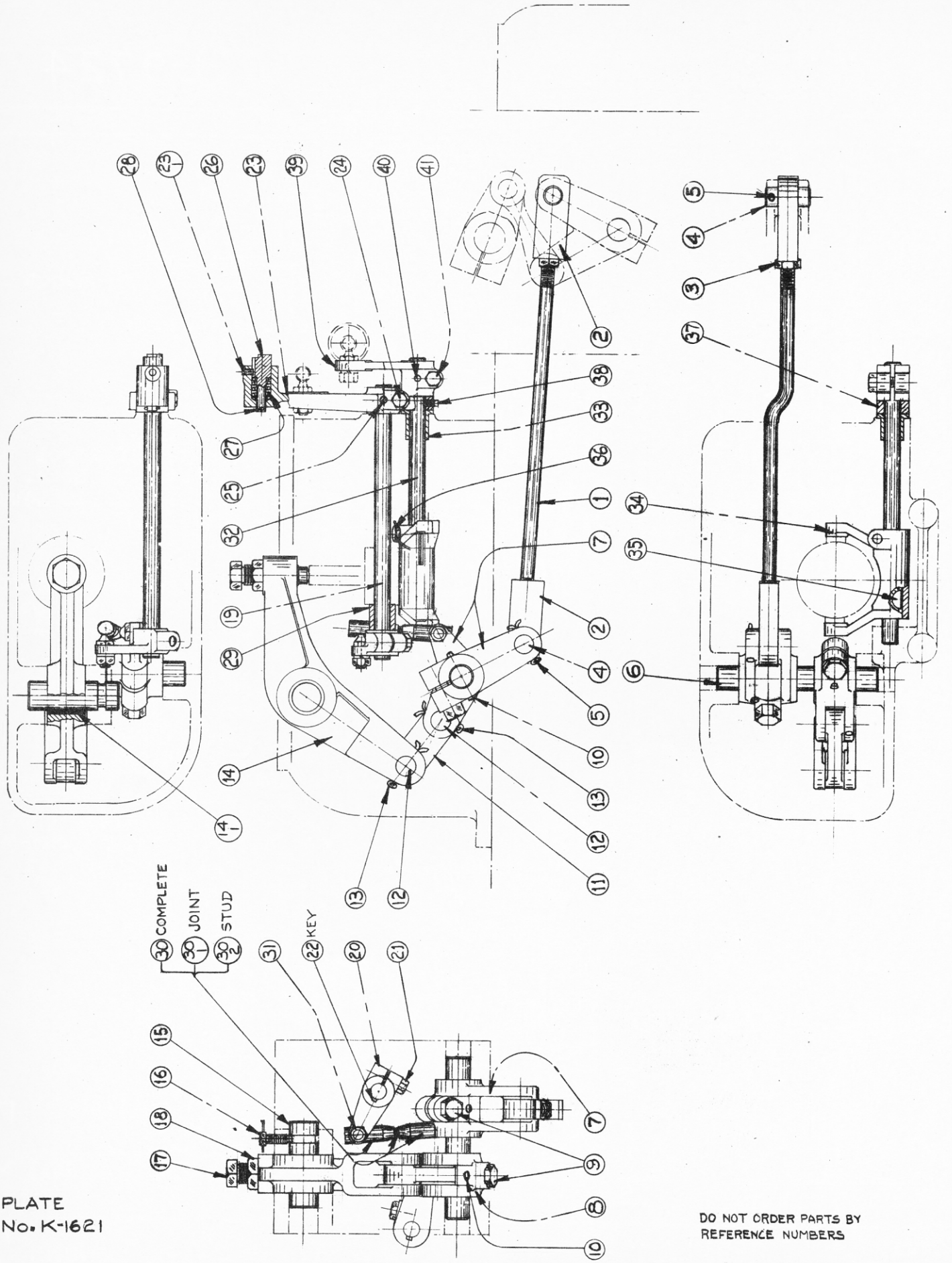

PLATE
No. K-1621

DO NOT ORDER PARTS BY
REFERENCE NUMBERS

EXTRA COPIES TO

TYPED BY DJA DATE 2/5/43 CHKD DATE 2-10-43 ISSUED BY APRVD.

CHANGES # 3 Retyped from 7/26/38 (No Changes)

CHANGES

ALWAYS GIVE PART NUMBER—PART NAME—ENGINE NUMBER
FOR STD. HARDWARE WITHOUT PART NUMBER GIVE DESCRIPTION AND SIZE
* INDICATES PART NOT SERVICED INDIVIDUALLY

L-9724

PLATE NO. K-1621

LINE NO.	DRWG. NO.	REF. NO.	PART NO.	NO. REQD.	PART NAME	ASSEM. DRWG. NO.
1		1	C-9648	1	ROD - Governor Spring Control	
2		2	C-9451	2	ROD-END - Governor Spring Control Rod	
3		3		1	HALF NUT -- 1/2-13-NC-Hex. - (St.)	
4		4	C-9453	2	PIN - Rod-End to Levers	
5		5		2	COTTER PIN -- 5/32 x 1 3/4 Lg. - - (St.)	
6	C-9440	6	C-9440L6 1/4	1	SHAFT - Governor Spring Control Lever	
7		7	F-5784	1	LEVER - Gov. Spring Control & Wedge Throw-out	
8		8	C-9574	1	LEVER - Governor Spring Control	
9	C-2408	9	C-2408L1 3/4	2	CAPSCREW - Spring Control Lever Clamp	
10				1	WIRE -- #16 Ga. x 12 Lg. - - (St.)	
11		10		2	TAPER PIN -- No. 2 x 2 Lg. - - (St.)	
12		11	C-9470	1	LINK - Governor Spring Control Lever	
13		12	C-9453	2	PIN - Link to Lever	
14		13		2	COTTER PIN -- 5/32 x 1 3/4 Lg. - (St.)	
15	C-9576	14	X2639	1	LEVER ASSEM. - Gov. Spring Adjust. & Control	
16		15	C-9489	1	PIN - Gov. Spring Adj. & Cont. Lever to Hous.	
17	C-9450	16	C-9450L1	1	SCREW - Gov. Spring Adj. & Cont. Lever Pin Lock	
18				1	WIRE -- #16 Ga. x 8 Lg. - - (St.)	
19		17	C-9582	1	SCREW - Governor Spring Adjusting	
20		18		1	HALF NUT -- 3/4-10-NC-Hex. - - (St.)	
21		19	C-9438	1	SHAFT - Fuel Wedge Throw-out Lever (Hand Control)	
22		20	C-9338	1	LEVER - Fuel Wedge Throw-out Lower (Hand Control)	
23	C-2406	21	C-2406L1 1/4	1	CAPSCREW - Wedge Throw-out Lower Lever Clamp	
24				1	WIRE -- #16 Ga. x 6 Lg. - - (St.)	
25		22		1	WOODRUFF KEY -- 1/8 x 3/4 Std. - - (St.)	
26	C-9621	23	X2663	1	LEVER - Wedge Throw-out Upper (Hand Control)	
27		24		1	CAPSCREW -- 3/8-16-NC x 1 1/4 Lg. - - (St.)	
28		25		1	TAPER PIN -- No. 2 x 1 1/2 Lg. - (St.)	
29		26	C-9615	1	PLUNGER - Wedge Hold-out Latch Control	
30		27	C-9627	1	SPRING - Latch Control Plunger	
31		28		1	COTTER PIN - 1/16 x 5/8 Lg. - - (St.)	
32		29	C-9473	1	SPACER - Fuel Wedge Throw-out Lever (Hand Cont.)	
33	C-9488	30	X2595	1	JOINT ASSEM.- Ball & Socket(Wedge Hand Throw-out)	
34		31		2	NUT -- 3/8-24-NF-Hex. - - (St.)	
35		31		2	LOCKWASHER -- 3/8 SAE Reg. - - (St.)	
36						
37		32	C-9437	1	SHAFT - Governor Wedge Control Vertical	
38		33	C-9430	1	BUSHING - Vertical Shaft (Upper)	
39		34	C-9581	1	FORK-- Governor Vertical Shaft Control	
40		35		1	WOOFRUFF KEY -- 1/8 x 3/4 Std. - - (St.)	
41	C-2406	36	C-2406L1 1/4	1	CAPSCREW - Vertical Shaft Fork Clamp	
42				1	WIRE -- #16 Ga. x 6 Lg. - - (St.)	
43		37	C-9486	1	COLLAR - Governor Vertical Shaft	
44		38		1	SETSCREW -- 1/4-20-NC x 1/2 Lg.	
45					Sq. Head - Cup Point - (St.)	
46		39	C-9330	1	LEVER - Governor Vertical Shaft	
47		40		1	TAPER PIN -- No. 2 x 1 1/2 Lg. -- (St.)	
48		41		1	CAPSCREW(CLAMP)--3/8-16-NC x 1 1/4 Lg. (St.)	
49						
50						

L-9724

FOR OPP. HAND SEE L-9725

FOR OPP. ROT. SEE

NAME GOVERNOR CONTROL LINKAGE GROUP

ORIGINALLY ISSUED FOR 6-CYL. 14½x18 - 15x19 MAR. R.H.

FOR TOTAL REQUIREMENTS PER ENGINE MULTIPLY NO. REQ'D GIVEN ABOVE BY NO. REQ'D FOR GROUP GIVEN ON INDEX SHEET

FORM 240 REV. 5-42 1M TRANS. 1M BOND

PARTS LIST

ATLAS IMPERIAL DIESEL ENGINE CO.
OAKLAND, CALIF. MATTOON, ILL.

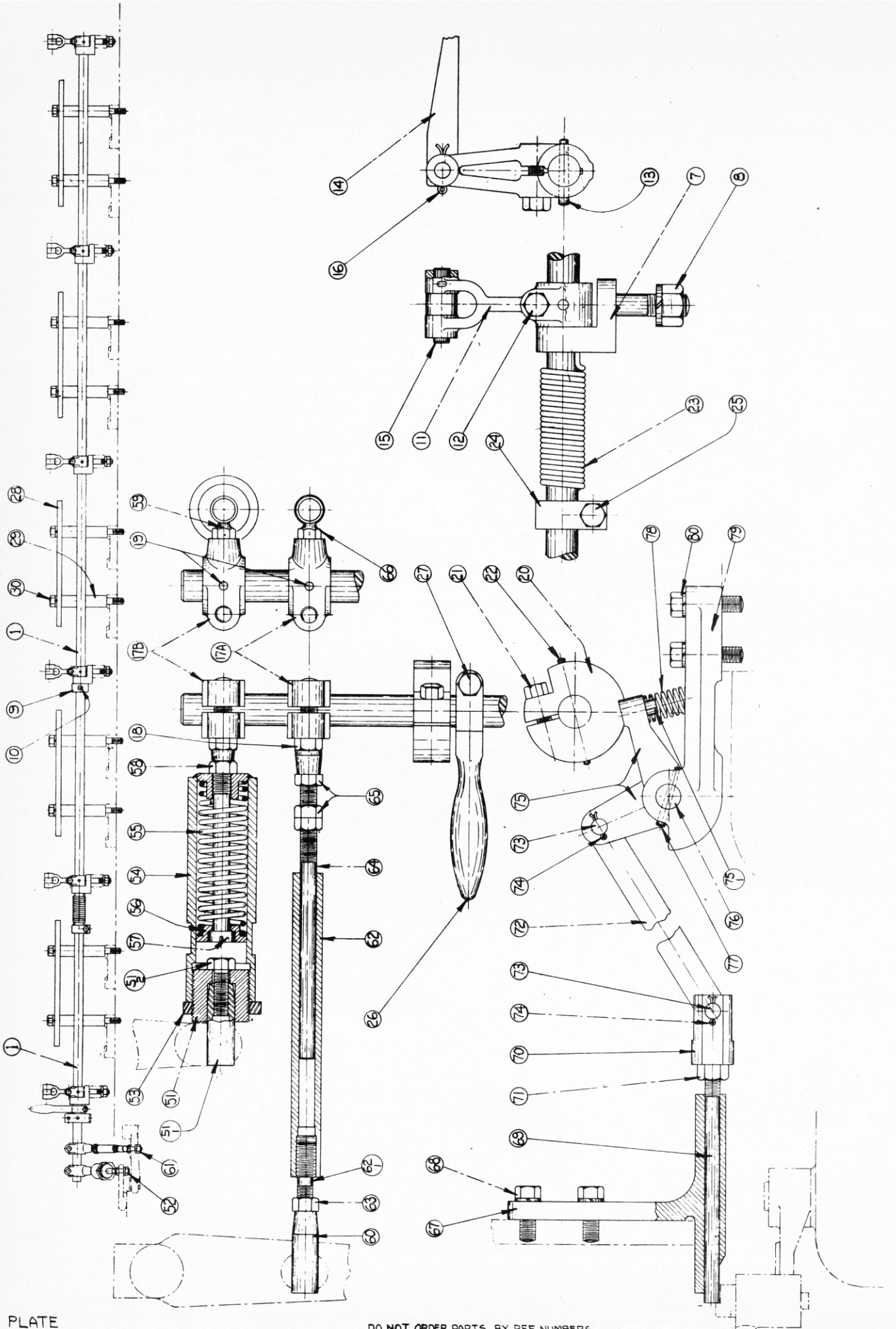

PLATE
No.- K-1807

DO NOT ORDER PARTS BY REF. NUMBERS

EXTRA COPIES TO

CHANGES #1

Retyped from 7/26/38 (No Changes)

TYPED BY DJA DATE 2/5/43 CHKD. DATE BY APRVD.

CHANGES

L-9728

ALWAYS GIVE PART NUMBER—PART NAME—ENGINE NUMBER
FOR STD. HARDWARE WITHOUT PART NUMBER GIVE DESCRIPTION AND SIZE
* INDICATES PART NOT SERVICED INDIVIDUALLY

PLATE NO. K-1807

LINE NO.	DRWG. NO.	REF. NO.	PART NO.	NO. REQD.	PART NAME	ASSEM. DRWG. NO.
1			----Gov. Control--(Lever to Wedge Shaft)----			
2	C-9477	51	X2592	1	PLUG ASSEM. - Wedge Shaft Cont. Sleeve	
3		52		1	NUT -- 3/8-24-NF-Hex. - - (St.)	
4		52		1	LOCKWASHER -- 3/8 SAE Reg. - - (St.)	
5		53	C-9490	1	LOCKNUT - Wedge Shaft Cont. Sleeve Plug	
6	C-9482	54	X2591	1	SLEEVE ASSEM. - Wedge Shaft Control	
7		55	C-9480	1	SPRING - Wedge Shaft Control Sleeve	
8		56	C-9481	1	WASHER - Wedge Control Sleeve Spring Retainer	
9		57	C-9479	1	SCREW - Wedge Cont. Sleeve Spring	
10		58		1	NUT -- 3/8-24-NF-Hex. -- (St.)	
11		59	C-8410	1	JOINT - Ball and Socket	
12						
13						
14			----Hand Control--(Lever to Wedge Shaft)----			
15		60	C-8408	1	JOINT - Ball & Socket	
16		61		1	NUT -- 3/8-24-NF-Hex. - - (St.)	
17		61		1	LOCKWASHER -- 3/8 SAE Reg. - - (St.)	
18	C-9492	62	X2596	1	SLEEVE ASSEM. - Wedge Hand Control	
19		63		1	HALF NUT -- 3/8-24-NF-Hex. - - (St.)	
20		64	C-9474	1	ROD - Wedge Hand Control	
21		65		3	NUT -- 3/8-24-NF-Hex. - - (St.)	
22		66	C-8410	1	JOINT - Ball & Socket	
23						
24						
25						
26			----Wedge Hold-out Latch & Release Linkage----			
27		67	C-9612	1	GUIDE - Wedge Latch & Release Rod	
28		68		2	CAPSCREW -- 3/8-16-NC x 1 Lg. - - (St.)	
29		68		2	LOCKWASHER -- 3/8 SAE Reg. - - (St.)	
30		69	C-9613	1	ROD - Wedge Latch Release	
31		70	C-9619	1	YOKE - Wedge Latch Release Rod	
32		71		1	NUT -- 3/8-24-NF-Hex. - - (St.)	
33		72	C-9620	1	LINK - Wedge Latch Release	
34		73	S-639	2	PIN - Link to Yoke & Latch	
35		74		4	COTTER PIN -- 3/32 x 3/4 Lg. - - (St.)	
36	C-9611	75	X2664	1	LATCH ASSEM. - Wedge Hold-out	
37	C-6623	76	C-6623L3 1/2	1	PIN - Latch to Bracket	
38		77		1	TAPER PIN -- No. 2 x 1 1/2 Lg. - - (St.)	
39		78	C-9626	1	SPRING - Wedge Hold-out Latch	
40		79	F-5882	1	BRACKET - Wedge Hold-out Latch	
41		80		2	CAPSCREW -- 1/2-13-NC x 1 1/2 Lg. - - (St.)	
42		80		2	LOCKWASHER -- 1/2 SAE Reg. - - (St.)	
43						
44						
45						
46						
47						
48						
49						
50						

L-9728

FOR OPP. HAND SEE L-9729

FOR OPP. ROT. SEE

NAME FUEL WEDGE SHAFT CONTROL LINKAGE GROUP

ORIGINALLY ISSUED FOR 6-cyo. 14½x18 - 15x19 Mar.R.H.

FOR TOTAL REQUIREMENTS PER ENGINE MULTIPLY NO. REQ'D GIVEN ABOVE BY NO. REQ'D FOR GROUP GIVEN ON INDEX SHEET

PARTS LIST

ATLAS IMPERIAL DIESEL ENGINE CO.
OAKLAND, CALIF. MATTOON, ILL.

FORM 240 REV. 5-42 1M TRANS. 1M BOND

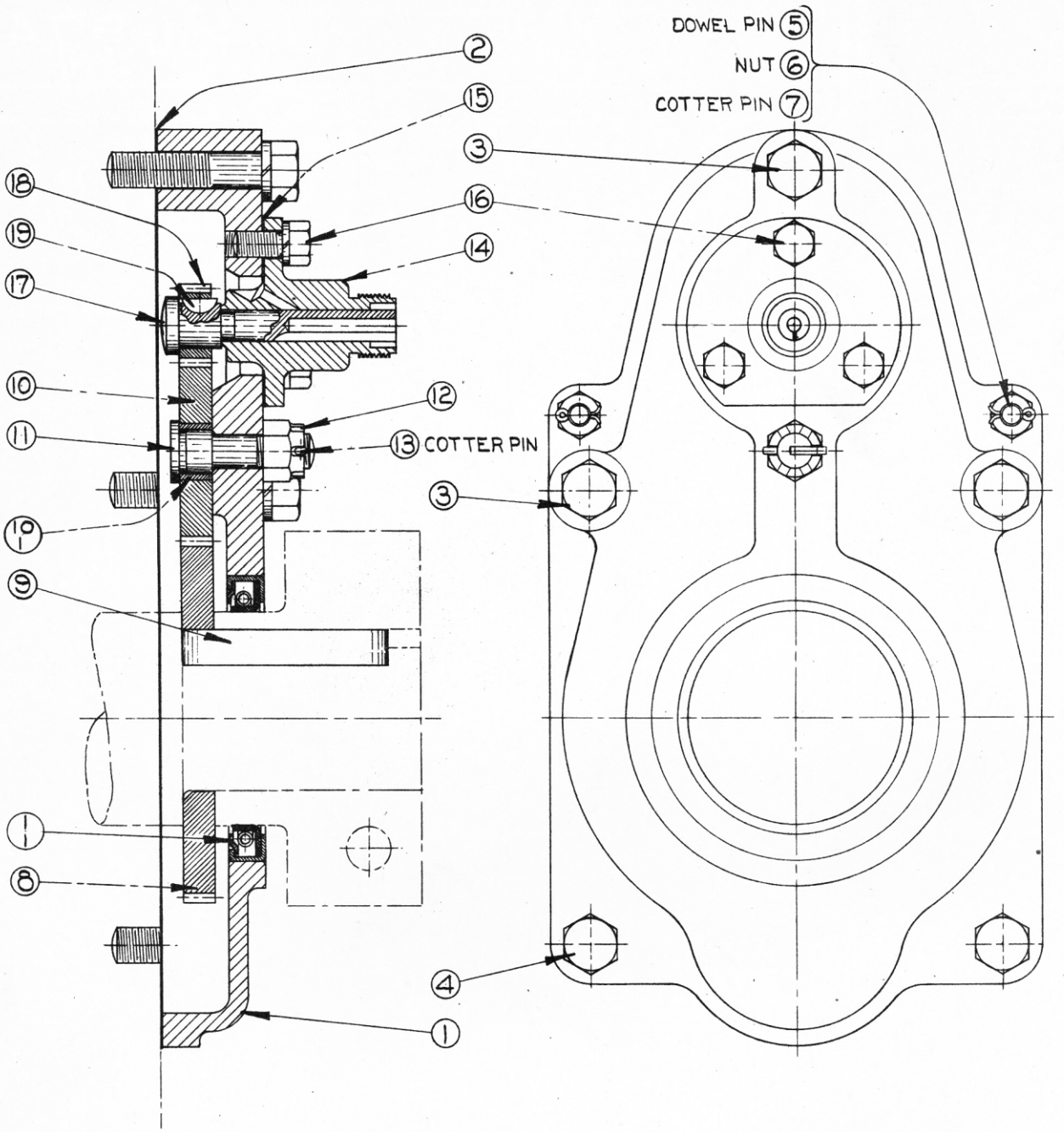

DO NOT ORDER PARTS BY REFERENCE NUMBERS

PLATE
No. W-1410

EXTRA COPIES TO

TYPED BY DJA DATE 2/2/43 CHKD. DATE 2-10-43 ISSUED BY APRVD.

Retyped from 9/2/38 (No Changes)

CHANGES #1

CHANGES

ALWAYS GIVE PART NUMBER—PART NAME—ENGINE NUMBER
FOR STD. HARDWARE WITHOUT PART NUMBER GIVE DESCRIPTION AND SIZE
* INDICATES PART NOT SERVICED INDIVIDUALLY

L-9741

PLATE NO. W-1410

LINE NO.	DRWG. NO.	REF. NO.	PART NO.	NO. REQD.	PART NAME	ASSEM. DRWG. NO.
1		1	X2679	1	HOUSING ASSEMBLY - Tachometer Drive	
2		2	F-5913	1	GASKET - Housing to Centerframe	
3		3		3	CAPSCREW -- 1/2-13-NC x 2 1/4 Lg. - (St.)	
4		4		2	CAPSCREW -- 1/2-13-NC x 1 1/4 Lg. - (St.)	
5				5	LOCKWASHER -- 1/2 SAE Reg. - - (St.)	
6	C-9701	5	C-9701L1 1/2	2	PIN - Housing to Centerframe Dowel	
7		6		2	HALF NUT -- 5/16-18-NC-Hex. - - (St.)	
8		7		2	COTTER PIN -- 1/16 x 1/2 Lg. (St.)	
9		8	C-9647	1	GEAR - Tachometer Drive - (Large)	
10	C-7308	9	C-7308L2 7/8	1	KEY - Gear & Bilge Pump Crank	
11	C-9644	10	X2667	1	GEAR ASSEM. - Tachometer Drive - (Intermediate)	
12		11	C-9642	1	PIN - Tach. Drive Intermed. Gear	
13		12		1	CASTLE NUT - 1/2-20-NF-Hex. - - (St.)	
14		13		1	COTTER PIN -- 3/32 x 1 Lg. - - (St.)	
15		14	C-9641	1	BEARING - Tachometer Drive Shaft	
16		15	C-8208	1	GASKET - Bearing to Drive Housing	
17		16		3	CAPSCREW -- 3/8-16-NC x 3/4 Lg. - (St.)	
18				3	LOCKWASHER -- 3/8 SAE Reg. - - (St.)	
19		17	C-9643	1	SHAFT - Tachometer Drive	
20		18	C-8281	1	GEAR - Tachometer Drive - (Small)	
21		19		1	WOODRUFF KEY -- 1/8 x 1/2 Std. - - (St.)	
22						
23						
24						
25						
26						
27						
28						
29						
30						
31						
32						
33						
34						
35						
36						
37						
38						
39						
40						
41						
42						
43						
44						
45						
46						
47						
48						
49						
50						

FOR OPP. HAND SEE

FOR OPP. ROT. SEE

NAME TACHOMETER DRIVE GROUP - - - (FOR WESTON TACHOMETER)

ORIGINALLY ISSUED FOR 6 CYL. 14 1/2x18 - 15x19 MAR.

FOR TOTAL REQUIREMENTS PER ENGINE MULTIPLY NO. REQ'D GIVEN ABOVE BY NO. REQ'D FOR GROUP GIVEN ON INDEX SHEET

FORM 240 REV. 5-42 1M TRANS. 1M BOND

PARTS LIST

ATLAS IMPERIAL DIESEL ENGINE CO.
OAKLAND, CALIF. MATTOON, ILL.

L-9741

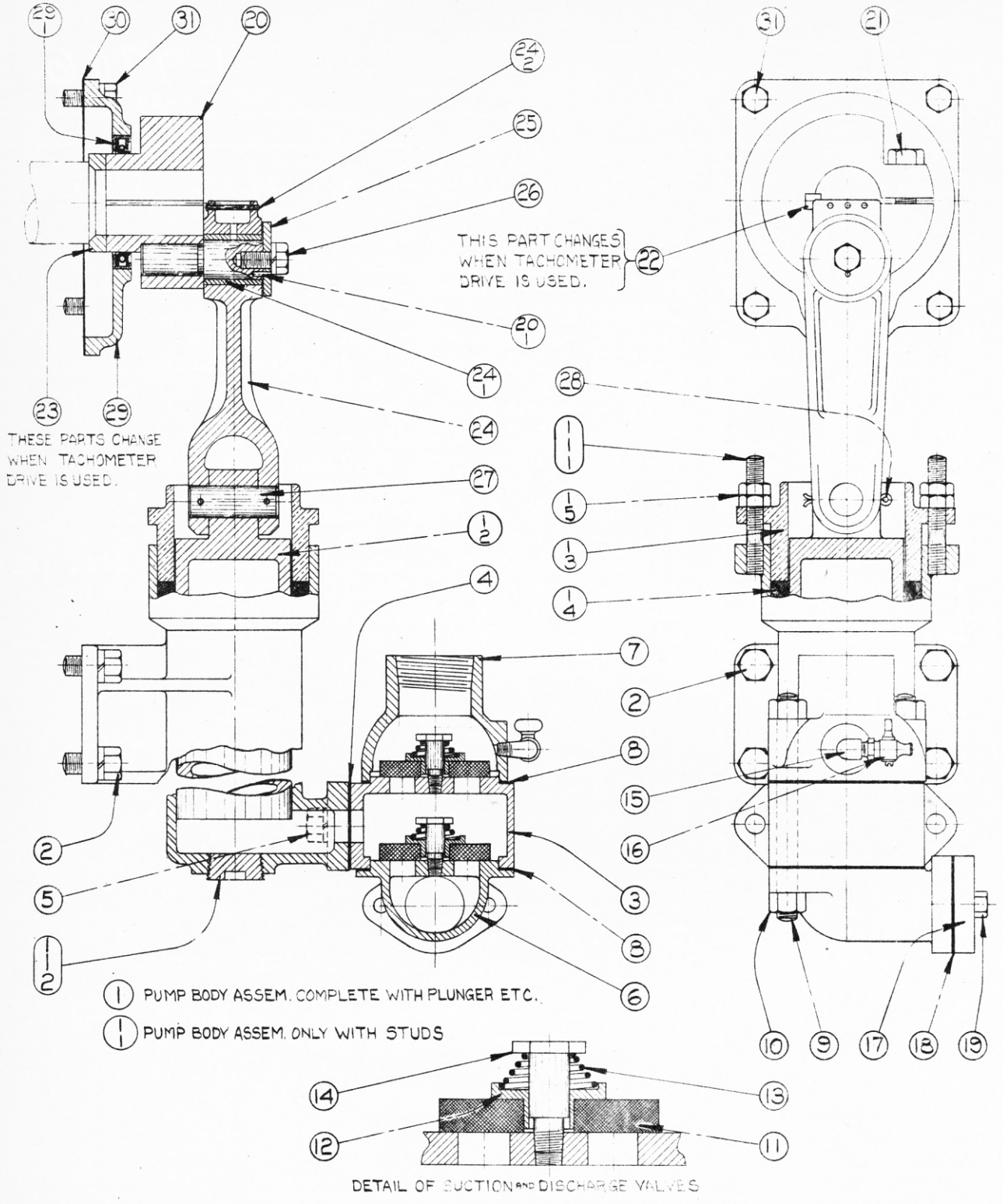

DO NOT ORDER PARTS BY REFERENCE NUMBERS

PLATE
No. W-1404

EXTRA COPIES TO

TYPED BY DJA DATE 2/2/43 CHKD. DATE 2-10-43 ISSUED BY APRVD.

CHANGES #2

Retyped from 1/24/39 (No Changes)

CHANGES

ALWAYS GIVE PART NUMBER—PART NAME—ENGINE NUMBER
FOR STD. HARDWARE WITHOUT PART NUMBER GIVE DESCRIPTION AND SIZE
* INDICATES PART NOT SERVICED INDIVIDUALLY

L-9766

PLATE NO. W-1404

LINE NO.	DRWG. NO.	REF. NO.	PART NO.	NO. REQD.	PART NAME	ASSEM. DRWG. NO.
1		1	X2807	1	PUMP ASSEMBLY - Bilge	
2		2		4	CAPSCREW -- 5/8-11-NC x 1 1/4 Lg. - (St.)	
3				4	LOCKWASHER -- 5/8 SAE Reg.-- - (St.)	
4		3	W-1272	1	GRID - Bilge Pump Discharge Valve	
5		4	C-349	1	GASKET - Grid to Pump Body	
6		5		2	CAPSCREW -- 5/8-11-NC x 1 1/2 Lg. (St.)	
7				2	LOCKWASHER -- 5/8 SAE Reg. - - (St.)	
8		6	F-5813	1	BONNET - Bilge Pump Suction Valve	
9	C-242	7	216-E	1	BONNET - Bilge Pump Discharge Valve	
10	S-2050	8	215A-E	2	GASKET - Bonnets to Grid	
11		9	C-487	2	STUD - Bonnets to Grid	
12		10		4	NUT -- 5/8-11-NC-Hex. - - (St.)	
13	S-1788	11	219-E1	2	VALVE - Bilge Pump Suction & Discharge	
14	S-2289	12	219A-6	2	BUSHING - Bilge Pump Valve	
15	C-461	13	218-E	2	SPRING - Bilge Pump Valve	
16	S-2046	14	217-7	2	STUD - Bilge Pump Valve	
17		15		1	STREET ELL(Disch. Bonnet)--1/4 - 45° Std. (Brass)	
18	C-9045	16	C-9045-P 1/4	1	COCK - Tee Handle Air (Discharge Bonnet)	
19	C-5351	17	786-B	1	FLANGE - Bilge Pump Suction Pipe	
20		18	S-1042	1	GASKET - Flange to Pump Bonnet	
21		19		2	CAPSCREW -- 1/2-13-NC x 1 1/4 Lg. - (St.)	
22						
23	C-9383	20	X2561	1	CRANK ASSEMBLY - Bilge Pump Drive	
24		21		1	CAPSCREW (Clamp) -- 5/8-11-NC x 2 Lg.-(St)	
25	C-7208	22	C-7208L2 3/8	1	KEY - Crank to Fuel Pump Crank	
26		23	C-9385	1	SPACER - Bilge Pump Drive Crank	
27	C-9397	24	X2565	1	ROD ASSEMBLY - Bilge Pump Connecting	
28		25	C-8004	1	WASHER - Connecting Rod Retainer	
29		26		1	CAPSCREW -- 1/2-13-NC x 7/8 Lg. - (St.)	
30				1	LOCKWASHER -- 1/2 SAE Reg. - - (St.)	
31		27	C-9398	1	PIN - Connecting Rod to Pump Plunger	
32		28		2	COTTER PIN -- 3/16 x 2 1/2 Lg. - (St.)	
33	C-5798	29	X2562	1	COVER ASSEMBLY - Camshaft End Bearing	
34		30	F-5795	1	GASKET - Cover to Centerframe	
35		31		4	CAP SCREW -- 1/2-13-NC x 1 1/4 Lg. - (St.)	
36				4	LOCKWASHER -- 1/2 SAE Reg. - - (St.)	
37						
38						
39						
40						
41						
42						
43						
44						
45						
46						
47						
48						
49						
50						

FOR OPP. HAND SEE

FOR OPP. ROT. SEE

NAME BILGE PUMP GROUP

ORIGINALLY ISSUED FOR 6 CYL. 14 1/2 x 18 MARINE

FOR TOTAL REQUIREMENTS PER ENGINE MULTIPLY NO. REQ'D GIVEN ABOVE BY NO. REQ'D FOR GROUP GIVEN ON INDEX SHEET

FORM 240 REV. 5-42 1M TRANS. 1M BOND

PARTS LIST

ATLAS IMPERIAL DIESEL ENGINE CO.
OAKLAND, CALIF. MATTOON, ILL.

L-9766

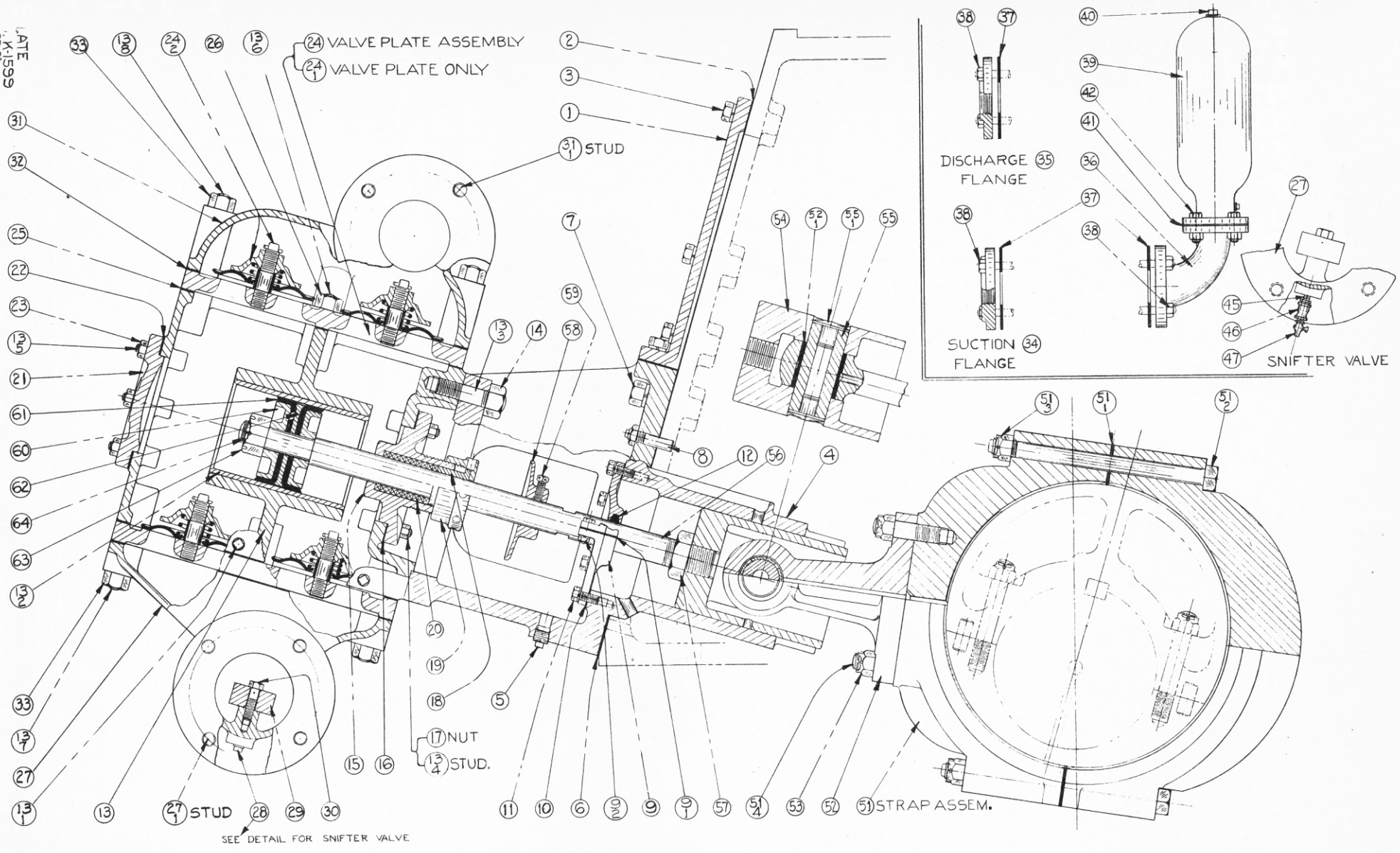
ATE K-1599 EB-2)
24 VALVE PLATE ASSEMBLY
24 1 VALVE PLATE ONLY
31 1 STUD
DISCHARGE 35 FLANGE
SUCTION 34 FLANGE
SNIFTER VALVE
17 NUT
13 4 STUD.
27 1 STUD
SEE DETAIL FOR SNIFTER VALVE
51 STRAP ASSEM.

EXTRA COPIES TO

TYPED BY MED DATE 6-21-39 ISSUED BY [illegible] DATE 6-22-39 CHKD. [illegible] APRVD. [illegible]

CHANGES

MASTER CATALOG CHANGES

ALWAYS GIVE PART NUMBER—PART NAME—ENGINE NUMBER
FOR STD. HARDWARE WITHOUT PART NUMBER GIVE DESCRIPTION AND SIZE
* INDICATES PART NOT SERVICED INDIVIDUALLY

L-9984 SHEET 1 OF 2

PLATE NO. K-1599

LINE NO.	DRWG. NO.	REF. NO.	*	PART NO.	NO. REQD.	PART NAME	ASSEM. DRWG. NO.
1		1		W-1257	1	COVER - Centerframe Pump Opening Top	
2		2		C-9344	1	GASKET-Cover to Centerframe & Cross-Head Guide	
3		3			10	CAPSCREW -- 1/2-13-NC x 1 1/4 Lg. - (Steel)	
4		3			10	LOCKWASHER -- 1/2 SAE Reg. - - (Steel)	
5		4		K-1407	1	GUIDE - Water Pump Cross-Head	
6		5			1	PIPE PLUG -- 3/8 Std. - - (Brass)	
7		6		C-9353	1	GASKET - Guide to Centerframe	
8		7			9	CAPSCREW -- 3/4-10-NC x 2 Lg. - (Steel)	
9		7			9	LOCKWASHER -- 3/4 SAE Reg. - - (Steel)	
10	C-6633	8		C-6633L2 1/4	2	PIN - Guide to Centerframe Dowel	
11		8			2	HALF NUT -- 1/2-13-NC-Hex. - - (Steel)	
12		8			2	COTTER PIN -- 1/16 x 1 Lg. - - (Steel)	
13	C-9236	9		X2499	1	SEAL ASSEM. - Water Pump Piston Rod Oil	
14		10		C-9356	1	GASKET - Oil Seal to Cross-Head Guide	
15		11			6	CAPSCREW -- 3/8-16-NC x 1 Lg. - (Steel)	
16		11			6	LOCKWASHER -- 3/8 SAE Reg. - - (Steel)	
17		12		C-9357	1	FELT - Piston Rod Oil Seal	
18		13		X2649	1	BODY ASSEM. - Water Pump	
19		14			4	NUT -- 3/4-10-NC-Hex. - - (Brass)	
20		15		F-3761	1	BOX - Piston Rod Stuffing	
21		16		C-3269	1	GASKET - Stuffing Box to Body	
22		17			6	NUT -- 3/8-16-NC-Hex. - - (Brass)	
23		18		C-3247	1	GLAND - Piston Rod Packing	
24		19		S-3066	1	NUT - Piston Rod Packing Gland	
25		20			10	PACKING--5/16 Sq. x 5 Lg.-(Flax - Belmont #552)	
26		21		F-5876	1	COVER - Pump Body End	
27		22		C-9356	1	GASKET - Cover to Pump Body	
28		23			6	NUT -- 3/8-16-NC-Hex. - - (Brass)	
29		24		X2548	2	PLATE ASSEM. - Water Pump Valve	
30		25		F-5790	2	GASKET - Valve Plate to Pump Body	
31		26			4	NUT -- 5/8-11-NC-Hex. - - (Brass)	
32		27		X2549	1	COVER ASSEM. - Water Pump Body (Bottom)	
33		28			2	PIPE PLUG -- 1/4 Std. - - (Brass)	
34		29		C-3258	1	BLOCK - Zinc	
35		30			1	CAPSCREW -- 3/8-16-NC x 1 1/2 Lg. - (Brass)	
36		31		X2550	1	COVER ASSEM. - Water Pump Body (Top)	
37		32		F-5789	2	GASKET - Top & Bottom Cover to Pump Body	
38		33			20	NUT -- 5/8-11-NC-Hex. - - (Brass)	
39							
40							
41							
42							
43							
44				---- CONTINUED ON SHEET NO. 2 ----			
45							
46							
47							
48							
49							
50							

FOR OPP. HAND SEE L-9985

FOR OPP. ROT. SEE

NAME CIRCULATING WATER PUMP GROUP

ORIGINALLY ISSUED FOR 6 CYL. 15 x 19 MARINE - R.H.

FOR TOTAL REQUIREMENTS PER ENGINE MULTIPLY NO. REQ'D GIVEN ABOVE BY NO. REQ'D FOR THIS GROUP GIVEN ON INDEX SHEET

PARTS LIST

ATLAS IMPERIAL DIESEL ENGINE CO.
OAKLAND, CALIF. MATTOON, ILL.

FORM NO. 240-5M-10-37

L-9984 SHEET 1 OF 2

EXTRA COPIES TO

TYPED BY MED DATE 6-21-39 ISSUED BY [illegible] DATE 6-22-39 CHKD. [illegible] APRVD. [illegible]

CHANGES

#1 9-5-41 Removed One 1/8 x 2½ Lg. Nipple & One 1/8 Std. Elbow

CHANGES

ALWAYS GIVE PART NUMBER—PART NAME—ENGINE NUMBER
FOR STD. HARDWARE WITHOUT PART NUMBER GIVE DESCRIPTION AND SIZE
* INDICATES PART NOT SERVICED INDIVIDUALLY

L-9984 SHEET 2 OF 2

PLATE NO. K-1599

LINE NO.	DRWG. NO.	REF. NO.	*	PART NO.	NO. REQD.	PART NAME	ASSEM. DRWG. NO.
1	C-9391	34		C-9391-P	1	FLANGE - Water Pump Suction Pipe	
2		35		F-5800	1	FLANGE - Water Pump Discharge Pipe	
3	C-9392	36		C-9392-P	2	ELBOW - Air Chamber	
4		37		C-3448	4	GASKET - Flange & Elbow to Pump Covers	
5		38			16	NUT -- 5/8-11-NC-Hex. - - (Brass)	
6		39		C-3276	2	CHAMBER - Air	
7		40			2	PIPE PLUG -- 1 Std. - - (Brass)	
8					1	PIPE PLUG -- 1/8 Std. - - (Brass)	
9	C-9393	41		C-9393-P	2	GASKET - Air Chamber to Elbow	
10		42			8	CAPSCREW -- 5/8-11-NC x 2 1/4 Lg.-(Brass)	
11		42			8	NUT -- 5/8-11-NC-Hex. - - (Brass)	
12							
13							
14		45			1	CLOSE NIPPLE -- 1/8 Std. - - (Brass)	
15	C-9066	46		C-9066-P 1/8	1	VALVE - Vertical Check	
16	C-9045	47		C-9045-P 1/8	1	COCK - Air	
17							
18							
19							
20							
21	W-1254	51		X2497	1	STRAP ASSEM. - Water Pump Eccentric	
22	F-5737	52		X2498	1	ROD ASSEM. - Water Pump Connecting	
23		53			2	CASTLE NUT -- 3/4-16-NF-Hex. - - (Steel)	
24		53			2	COTTER PIN -- 1/8 x 1 1/4 Lg. - (Steel)	
25		54		W-1255	1	CROSS-HEAD - Water Pump	
26		55		X2563	1	PIN ASSEM. - Water Pump Cross-head	
27							
28		56		C-9254	1	ROD - Water Pump Piston	
29		57			1	HALF NUT(Piston Rod Lock)--1 1/4-7-NC-Hex.-(St.)	
30		58		C-3246	1	GUARD - Piston Rod Splash	
31		59			1	SETSCREW -- 3/8-16-NC x 7/8 Lg. - Sq. Hd. - Cup Point - (Steel)	
32							
33		60		C-9599	2	PISTON - Water Pump	
34		61		C-9598	2	CUP-LEATHER - Water Pump Piston	
35		62		C-9597	1	SPACER - Piston Cup-Leather	
36		63		C-3267	1	NUT - Water Pump Piston Retainer	
37		64			1	COTTER PIN -- 1/8 x 1 3/4 Lg. - (Bronze)	
38							
39							
40							
41							
42							
43							
44							
45							
46							
47							
48							
49							
50							

FOR OPP. HAND SEE L-9985

FOR OPP. ROT. SEE

NAME CIRCULATING WATER PUMP GROUP

ORIGINALLY ISSUED FOR 6 CYL. 15 x 19 MARINE - R.H.

FOR TOTAL REQUIREMENTS PER ENGINE MULTIPLY NO. REQ'D GIVEN ABOVE BY NO. REQ'D FOR THIS GROUP GIVEN ON INDEX SHEET

PARTS LIST

ATLAS IMPERIAL DIESEL ENGINE CO.
OAKLAND, CALIF. MATTOON, ILL.

FORM NO. 240-3M-10-27

L-9984 SHEET 2 OF 2

ASSEM. LIST NEGATIVE NO. AL 46 15x19

ATLAS IMPERIAL DIESEL ENGINE CO. SUB-ASSEMBLY LIST

ALWAYS GIVE--ENGINE NO.--PART NAME--PART NO. OR COMPLETE DESCRIPTION AND SIZE
DO NOT ORDER PARTS BY REFERENCE NUMBERS
* INDICATES PARTS NOT SERVICED INDIVIDUALLY

REF. NO.	PART NO.	NO. REQD.	DESCRIPTION	
	X71		FILTER ASSEM. - HIGH PERSSURE FUEL	Includes
1	F-1982	1	BODY	
2	S-1686	1	CAP - Filter Body	
3	PG 25	1	ELEMENT - Filter	
	X204		VALVE ASSEM. - COMPRESSION RELIEF SAFETY -	Includes
1	F-2798	1	BODY	
2	X541	1	STEM ASSEMBLY	
3	S-3339	1	SPRING	
4	S-3337	2	WASHER	
5	S-3338	1	CAP - Valve Body	
6		1	SETSCREW--1/4-20 x 1 Lg.-Headless-Cup Pt.	
7		1	HALF NUT -- 1/4-20-Hex.	
	X210		ACCUMULATOR ASSEM. - FUEL OIL (Order as per X3234)	Includes
	X234		TUBE ASSEM. - SPRAY VALVE TEST	Includes
*		1	TUBE	
*		2	SLEEVE	
*		2	NUT	
	G261-29		PLUNGER ASSEM. - BILGE PUMP	Includes
*		1	PLUNGER	
*		1	PIPE PLUG -- 2 Std. - (Brass)	
	X382		ROCKER ASSEM.-FUEL SPRAY VALVE (SHORT)	Includes
*		1	ROCKER	
1	C-1841	2	BUSHING	
2	C-8294	1	BUTTON	
	X384		VALVE & CAGE ASSEM. - INLET	Includes
1	X385	1	CAGE ASSEMBLY	
2	C-1822	1	VALVE	
3	C-1820	1	SPRING (Inner)	
4	C-1835	1	SPRING (Outer)	
5	C-1821	1	WASHER - Spring Retainer	
6	C-1842	2	LOCK - Retainer Washer	
7		2	PIPE PLUG -- 1/4 Std.	
	X385		CAGE ASSEM.-INLET & EXHAUST VALVE	Includes
*		1	CAGE	
*		3	PIPE PLUG -- 1/2 Std.	
1	F-3213	1	GUIDE - Valve	
	X386		VALVE & CAGE ASSEM. - EXHAUST	Includes
1	X385	1	CAGE ASSEMBLY	
2	C-1823	1	VALVE	
3	C-1820	1	SPRING (Inner)	
4	C-1835	1	SPRING (Outer)	
5	C-1821	1	WASHER - Spring Retainer	
6	C-1842	2	LOCK - Retainer Washer	
	X387		YOKE ASSEM. - INLET & EXHAUST VALVE	Includes
*		1	YOKE	
*		1	STEM	
	X388		PISTON ASSEM. - AIR STARTING VALVE	Includes
*		1	PISTON	
*		1	BUTTON	
	X389		VALVE & CAGE ASSEM.-AIR STARTING VALVE	Includes
1	581-GX8	1	CAGE	
2	F-1508	1	VALVE	
3	585-N6	1	BUSHING	
4	C-2152L2 1/8	2	RING - Piston (Valve Bushing Seal)	
5		1	NUT -- 1-14-Hex.	
6	C-9291	1	SPRING	
7	C-1817	1	CYLINDER	
8		1	NUT -- 3/4-16-Hex.	
9	C-254	1	PIN - Dowel	
10	X388	1	PISTON ASSEMBLY	
11	584-GX8	1	STOP - Piston	
12	2C2100	1	SNAP-RING	
	X510		CLAMP ASSEM. - FUEL RAIL	Includes
*		1	CLAMP	
*		1	CAP	
1		2	CAPSCREW -- 3/8-16 x 1 Lg.	
	X541		STEM ASSEM.-COMPRESSION RELIEF SAFETY VALVE	Includes
*		1	VALVE	
*		1	STEM	
	G571-C3		PAWL ASSEM. - AIR STARTING HANDLE	Includes
*		1	PAWL	
1	S-2892	1	PIN	

REF. NO.	PART NO.	NO. REQD	DESCRIPTION	
	X573		TUBE ASSEM.-H.P. FUEL(3/8 O.D. x 22 LG.)	Includes
*		1	TUBE	
*		2	SLEEVE	
*		2	NUT	
	X575		TUBE ASSEM.-H.P. FUEL(3/8 O.D. x 13 LG.)	Includes
*		1	TUBE	
*		2	SLEEVE	
*		2	NUT	
	GA630-V6		ROD ASSEM. - CONNECTING	Includes
*		1	ROD - Connecting	
1	628-V6	1	BUSHING	
2		1	PIPE PLUG -- 1/2 Std.	
	G632-E		VALVE ASSEM. - BALL CHECK	Includes
*		1	BODY	
*		1	STEEL BALL -- 3/8 Std.	
*		1	PIN - Ball Retainer	
	X682		TUBE ASSEM.-H.P. FUEL(3/8 O.D. x 36 LG.)	Includes
*		1	TUBE	
*		2	SLEEVE	
*		2	NUT	
	X687		TUBE ASSEM.-H.P. FUEL(3/8 O.D. x 84 LG.)	Includes
*		1	TUBE	
*		2	SLEEVE	
*		2	NUT	
	X698		SILENCER ASSEM. - AIR SUCTION	Includes
1	F-1612A	1	SILENCER	
2	F-1613	1	CONE	
3	S-1814	4	SPACER	
4		4	CAPSCREW -- 1/2-13 x 2 1/4 Lg.	
5		1	CAPSCREW -- 1/2-13 x 4 1/2 Lg.	
6		5	NUT -- 1/2-13-Hex.	
	X876		ROCKER ASSEM.-FUEL SPRAY VALVE(LONG)	Includes
*		1	ROCKER	
1	590A-HX	2	BUSHING	
2	C-8294	1	BUTTON	
3	F-1614	1	SCREW - Adjusting	
4		1	CAPSCREW -- 5/8-11 x 2 Lg.	
	X877		ROCKER ASSEM. - EXHAUST	Includes
*		1	ROCKER	
1	550A-HX	2	BUSHING	
2	C-125	1	ROLLER	
3	C-126	1	PIN - Roller	
4	F-1614	1	SCREW - Adjusting	
5		1	CAPSCREW -- 5/8-11 x 2 Lg.	
	X878		ROCKER ASSEM. - INLET	Includes
*		1	ROCKER	
1	550A-HX	2	BUSHING	
2	C-125	1	ROLLER	
3	C-126	1	PIN - Roller	
4	F-1614	1	SCREW - Adjusting	
5		1	CAPSCREW -- 5/8-11 x 2 Lg.	
	X879		ROCKER ASSEM. - AIR STARTING VALVE	Includes
*		1	ROCKER	
1	590A-HX	2	BUSHING	
2	F-1614	1	SCREW - Adjusting	
3		1	CAPSCREW -- 5/8-11 x 2 Lg.	
	X1009		PIN ASSEM. - PISTON	Includes
*		1	PIN	
1	621A-F	1	PIN - Dowel	
	G1197-E1		VALVE ASSEM.-COMPRESSION RELEASE(SNIFTER)-	Includes
1	1197-E1	1	BODY	
2	G1198-E	1	STEM ASSEMBLY	
	G1198-E		STEM ASSEM.-COMPRESSION RELEASE VALVE(SNIFTER)	Includes
*		1	STEM	
*		1	HANDLE	
	G1215-E		VALVE ASSEM.-FUEL OIL ACCUMULATOR	Includes
*		1	BODY	
1	1206-C31	1	STEM	
2		3	PACKING -- 1/2 O.D. x 1/4 I.D. x 1/4 Wide - Garlock #333	
3	866-E	1	GLAND - Packing	
4	1208-C3	1	NUT - Packing Gland	

ASSEM. LIST NEGATIVE NO. AL47 15x19

ATLAS IMPERIAL DIESEL ENGINE CO. SUB-ASSEMBLY LIST

ALWAYS GIVE--ENGINE NO.--PART NAME--PART NO. OR COMPLETE DESCRIPTION AND SIZE
DO NOT ORDER PARTS BY REFERENCE NUMBERS
* INDICATES PARTS NOT SERVICED INDIVIDUALLY

REF. NO.	PART NO.	NO. REQD.	DESCRIPTION
	G1230-E1		VALVE ASSEM. - FUEL PRESSURE RELIEF Includes
1	G1243-E	1	HANDLE ASSEMBLY
2	1238A-E	1	PIN - Handle to Bearing
3		2	COTTER PIN -- 3/32 x 3/4 Lg.
4	1244-E	1	SECTOR
		2	CAPSCREW -- 5/16-18 x 1 1/4 Lg.
		2	NUT -- 5/16-18-Hex.
7	1238-E	1	BEARING - Handle
8	1237-E1	1	CAGE - Spring
9	1245-E1	1	PLUG - Spring (Upper)
10	1236-E	1	SPRING - Relief Valve
11	1240-E	1	NUT - Spring Adjust. Screw
		1	MACHINE SCREW--1/4-20 x 1/2 Lg.-Rnd. Hd. (Brass)
13	1239-E	1	SCREW - Spring Adjusting
14	1233-E	1	STEM - Relief Valve
15	1234-E	1	SEAT - Valve Stem
16	1230-E1	1	BODY - Relief Valve
17		3	PACKING RING -- 13/16 O.D. x 1/2 I.D. x 3/16 Wide - Garlock #333
18	1231A-E	1	RING - Packing Retainer
19	1231-E2	1	GLAND - Packing
20	1232-E1	1	STUD - Adaptor
21		1	HALF NUT -- 1-8-Hex.
22	1242-E	1	ELBOW - Fuel Inlet
23	1237A-E	1	CUP - Drain
	G1243-E		HANDLE ASSEM.-FUEL PRESS. RELIEF VALVE Includes
1	1243-E	1	CAM - Spring Control
2	1117-E	1	EXTENSION - Handle
3	1249-E	1	SCREW - Handle
4	1118-E1	1	PAWL
5	1124-E	1	SPRING - Pawl
6	1125-E	1	SCREW - Spring Adjust.
7		1	TAPER PIN -- #1 x 1 Lg.
		1	HALF NUT -- 1/4-20-Hex.
	G1275-EB32		PUMP ASSEM. - PRIMING Includes
*		1	BODY
*		1	PLUNGER - Pump
1		1	PACKING -- 1/8 Rd. x 7 Lg. - (Pelro)
2	S-2065	1	WASHER - Packing
3	S-2064	1	NUT
		1	NUT -- 7/16-20-Hex.
	X1445		VALVE ASSEM. - LUBE OIL PRESSURE RELIEF Includes
*		1	BODY
1	C-4334	1	VALVE
2	C-4331	1	SPRING - Relief Valve
3	C-4332	1	PLUG - Press. Adjust.
		1	WIRE(Adjust. Plug Lock)--#16 Ga.x 3 Lg.
	X1665		CYLINDER ASSEMBLY Includes
*		1	CYLINDER
1	501-GX8	8	STUD - Cylinder Head
2	C-1066	8	PIPE - Cylinder to Head Water By-Pass
3	605-N	1	COVER - Clean-out
4	605A-N	1	GASKET
5		4	CAPSCREW -- 1/2-13 x 1 1/4 Lg.
	X1695		CYLINDER ASSEMBLY Includes
1	X1665	1	CYLINDER ASSEMBLY
2	X1696	1	LINER ASSEMBLY
3	C-6455	1	GASKET - Liner to Cylinder
4	C-6454	3	GROMMET - Liner
5	C-3295	2	NIPPLE - Lube Oil
6	612-R	2	GLAND - Lube Oil Nipple Packing
7	610A-RB3	4	GROMMET - Lube Oil Nipple
8	S-2914	2	WASHER - Lube Oil Nipple
	X1696		LINER ASSEM. - CYLINDER Includes
*		1	LINER
1	S-988	1	PIN - Dowel
	X1728		PUSH-ROD ASSEM. - AIR STARTING VALVE Includes
*		1	PUSH-ROD
*		1	SOCKET (Upper)
*		1	PLUG (Lower)
	X1957		COLUMN ASSEM. - JAHN'S GOVERNOR Includes
*		1	COLUMN
1	S-1105	2	STUD
	X1958		DASH-POT ASSEM. - JAHN'S GOVERNOR Includes
1	X1959	1	CYLINDER ASSEM. - Dash-Pot
2	S-562	1	PISTON - Dash-Pot
3	S-560	1	ROD-END - Piston Rod
4		1	MACHINE SCREW--1/4-20 x 5/8 Lg.-Flat Hd(Brass)
5	S-626	1	ROD - Dash-Pot Piston
6	S-561	1	PIN - Rod-End to Piston Rod
7	S-646	1	COVER - Dash-Pot Cylinder
8		4	CLOSE NIPPLE -- 1/8 Std. - (Brass)
9		1	ELBOW -- 1/8 Std. - (Brass)
10	C-9847-P 1/8	1	ANGLE VALVE - Needle Point
11		1	UNION -- 1/8 Std.

REF. NO.	PART NO.	NO. REQD	DESCRIPTION
	X1959		CYLINDER ASSEM.-JAHN'S GOV. DASH-POT Includes
*		1	CYLINDER
1	S-1108	1	STUD - Gov. Column
	X1960		LOCK ASSEM.-JAHN'S GOV. REGULATOR DISC Includes
*		1	LOCK
*		1	BUTTON
	X1967		COVER ASSEM.-JAHN'S GOV. COLUMN UPPER BEARING Includes
*		1	COVER
1		1	OIL SEAL -- National Motor Brg. Co. #50151
	X2114		SPINDLE ASSEM. - FUEL SPRAY VALVE Includes
*		1	EXTENSION
*		1	SPINDLE
	X2155		SEAL ASSEM. - CRANKSHAFT OIL Includes
*		1	SEAL (Upper Half)
*		1	SEAL (Lower Half)
1	C-8081	2	GASKET
		4	CAPSCREW -- 1/2-13 x 2 Lg.
		4	NUT -- 1/2-13-Hex.
		4	LOCKWASHER -- 1/2 SAE Reg.
	X2156		CLAMP ASSEM. - CRANKSHAFT GEAR Includes
*		2	CLAMP
1	C-2612L9	2	BOLT
1		2	CASTLE NUT -- 3/4-16-Hex.
1		2	COTTER PIN -- 1/8 x 1 1/4 Lg.
	X2157		BEARING ASSEM.-CONNECT. ROD CRANK PIN Includes
*		2	BEARING
1	C-8080-B	4	SHIM (1/32)
1	C-8080-D	10	SHIM (.010)
1	C-8089-E	8	SHIM (.003)
1	C-2508L2	2	CAPSCREW
3		2	CASTLE NUT -- 1/2-20-Hex.
3		2	COTTER PIN -- 3/32 x 1 Lg.
4	S-2760	2	PIN - Dowel (Connect. Rod Bolt Lock)
	X2158		GEAR ASSEM. - CRANKSHAFT Includes
*		2	GEAR
1	S-3135	2	PIN - Dowel
	X2161		HOUSING ASSEM. - H.P. FUEL PUMP Includes
*		1	HOUSING
1-2	C-2008L2 1/4	8	STUD - Pump Mounting Plate
3		2	PLUG -- 1 Std. "Welch" Expansion
	X2162		ROD ASSEM.-H.P. FUEL PUMP CONNECTING Includes
*		1	ROD
*		1	CAP
1	C-227-D	4	SHIM (.010)
1	C-227-E	8	SHIM (.003)
2	C-222	2	BOLT
3		2	CASTLE NUT -- 5/8-18-Hex.
3		2	COTTER PIN -- 1/8 x 1 1/4 Lg.
	X2163		VALVE ASSEM.-H.P. FUEL PUMP SUCTION Includes
1	C-8095	1	CAGE - Suction Valve
2	C-8096	1	VALVE - Suction
3	C-8101	1	SPRING - Valve
4	C-8097	1	RETAINER - Valve Spring
5		1	COTTER PIN -- 1/16 x 7/8 Lg.
	X2164		BODY ASSEM. - H.P. FUEL PUMP Includes
*		1	BODY
*		1	PLUNGER
	X2165		MANIFOLD ASSEM. - LUBE OIL (CENTER SECT.) Includes
*		1	PIPE
*		2	TEE
*		2	FLANGE
	X2166		MANIFOLD ASSEM.-LUBE OIL(INLET END SECT.) Includes
*		1	PIPE
*		2	TEE (Outlet)
*		1	TEE (Inlet)
*		1	FLANGE
	X2169		MANIFOLD ASSEM. - LUBE OIL (INT. GEAR END SECT.) Includes
*		1	PIPE
*		1	TEE (End)
1		1	REDUCING BUSHING -- 2 x 1/2 Std.-(Brass)
*		2	TEE (Outlet)
*		1	FLANGE
	X2171		LIFTER ASSEM. - AIR STARTING VALVE Includes
*		1	LIFTER
1	C-8157	1	ROLLER
2	C-8158	1	PIN

NEG. No. AL48
ISSUE No. 2
ENG. SIZE 15 x 19

ATLAS IMPERIAL DIESEL ENGINE CO.

SUB-ASSEMBLY LIST

ALWAYS GIVE - ENGINE NO. - PART NAME - PART NUMBER OR COMPLETE DESCRIPTION AND SIZE
DO NOT ORDER PARTS BY REFERENCE NUMBERS
* INDICATES PARTS NOT SOLD INDIVIDUALLY

REF. No.	PART NUMBER	NO. REQD	DESCRIPTION
	X2172		PUSH-ROD ASSEM.-INLET & EXHAUST VALVE Includes
*		1	TUBE
*		1	PLUG
*		1	SOCKET
	X2179		CAMSHAFT ASSEMBLY Includes
*		1	CAMSHAFT
1	C-8087	1	COUPLING - Fuel Pump Crank
2	C-6710L1 1/2	1	KEY
3		1	PIPE PLUG -- 1/8 Std.
	X2180		ADAPTOR ASSEM.-LOW PRESS. FUEL PUMP Includes
*		1	ADAPTOR
1	C-8159	1	BUSHING
	X2181		BEARING ASSEM. - LOW PRESS. FUEL PUMP Includes
*		1	BEARING
1	C-8159	2	BUSHING
2		1	OIL SEAL -- National Motor Brg. Co. #50018
3		1	PIPE PLUG -- 1/8 Std.
	X2182		HOUSING ASSEM. - PUMP DRIVE Includes
*		1	HOUSING
1	C-8160	1	BUSHING
	X2183		BEARING ASSEM.-LUBE OIL PRESS. PUMP END Includes
*		1	BEARING
1	C-8161	1	BUSHING
	X2189		BEARING ASSEM. - CAMSHAFT Includes
*		1	BEARING
1	C-8199	1	BUSHING
	X2190		BEARING ASSEM. - CAMSHAFT (NARROW) Includes
*		1	BEARING
1	C-8200	1	BUSHING
	X2191		NIPPLE ASSEM. - AIR STARTING MANIFOLD Includes
*		1	NIPPLE
*		1	COUPLING
	X2192		MANIFOLD ASSEM. - AIR STARTING Includes
			---- SERVICE NOTE ----
			For Service Furnish
			One - X3357 - Manifold Assembly
			One - X2191 - Nipple Assembly
	X2195		VALVE ASSEM.-AIR START. MANIFOLD BLEEDER -Includes
1	S-145-A	1	CAGE - Valve
2	S-145	1	VALVE
3	C-420	1	SPRING - Valve
4		1	PLAIN WASHER -- 3/8 SAE Std.
5		1	COTTER PIN -- 3/32 x 3/4 Lg.
	X2196		HANDLE ASSEM.-AIR START. VALVE CONTROL Includes
1	F-2486	1	HANDLE
2	571A-C3	1	ROD - Handle Pawl
3	572-GX8	1	SPRING - Pawl Rod
4	G571-C3	1	PAWL ASSEMBLY
5		1	HALF NUT -- 5/16-18-Hex.
	X2197		SPRING ASSEM.-SPRAY VALVE PUSH-ROD BUFFER-Includes
*		1	CAGE
*		1	SPACER - Spring
*		1	SPRING - Buffer
*		1	PLUG - Spring Retainer
	X2200		ADAPTOR ASSEM. - JAHN'S GOV. COLUMN Includes
*		1	ADAPTOR
1	C-2010L2 1/4	4	STUD
	X2201		HEAD ASSEM. - CYLINDER Includes
*		1	HEAD
		7	PIPE PLUG -- 1 Std.
1		1	PIPE PLUG -- 3/8 Std.
2	C-1837	6	STUD - Inlet Valve Cage
3	C-8228	6	STUD - Exhaust Valve Cage
4	C-2014L4	2	STUD - Air Starting Valve Cage
5	S-60	4	STUD - Rocker Shaft Bearing
6	C-2010L5 3/8	1	STUD - Fuel Spray Valve Rocker Stand
7	854A-JX	1	STUD - Fuel Spray Valve Clamp
8	C-2012L2 3/4	4	STUD - Exhaust Manifold Elbow
9	C-3147	2	NOZZLE - Spray Valve Cooling
10	621A-F	3	PIN - Dowel
11	C-8214	2	COVER - Cleanout (Blind)
12	C-8216	1	COVER - Cleanout (Tapped)
13	C-8215	3	GASKET - Cover
14		12	CAPSCREW -- 1/2-13 x 1 Lg.

REF. No.	PART NUMBER	NO. REQD	DESCRIPTION
	X2202		HEAD ASSEM. - CYLINDER Includes
1	X2201	1	HEAD ASSEMBLY
2	X384	2	VALVE & CAGE ASSEM. - INLET
3	X386	2	VALVE & CAGE ASSEM. - Exhaust
4	C-2153L4	4	RING - Piston (Valve Cage Seal)
5	C-1836	4	GASKET - Valve Cage to Head
6	C-8229	6	SPACER - Exh. Valve Cage Stud
7		12	NUT -- 3/4-10-Hex.
8	X389	1	VALVE & CAGE ASSEM. - Air Starting
9	C-2153L3	2	RING - Piston (Valve Cage Seal)
10	C-174	1	GASKET - Valve Cage to Head
11		2	NUT -- 7/8-9-Hex.
	X2205		COUPLING ASSEM. - FUEL WEDGE SHAFT Includes
*		1	CORE - Coupling
*		2	SOCKET
	X2206		BRACE ASSEM.-GAGE BOARD TO FUEL RAIL Includes
*		1	BRACE
*		1	CAP
1		2	CAPSCREW -- 3/8-16 x 1 Lg.
	X2211		MANIFOLD ASSEM. - SPRAY VALVE COOLING Includes
*		1	PIPE
*		1	TEE (Inlet)
*		11	TEE (Outlet)
	X2212		MANIFOLD ASSEM. - SPRAY VALVE DRAIN Includes
*		1	PIPE
*		2	TEE (End)
*		4	TEE (Center)
	X2215		VALVE ASSEM. - FUEL SPRAY (DRAIN TYPE) Includes
1	F-5401	1	BODY
2	S-2757	1	GLAND - Packing (Lower)
3	866-E	1	GLAND - Packing (Upper)
4		6	PACKING--1/2 O.D. x 1/4 I.D. x 1/4 Wide - Garlock #333
5	865-E	1	NUT - Packing Gland
6	X2114	1	SPINDLE ASSEMBLY
7	C-8292	1	GUIDE - Spindle
8	856-HX	1	NUT - Valve Seat
9	F-5400	1	CASING - Valve Spring
10		1	SETSCREW--3/8-16 x 1/2 Lg.-Socket Hd.-Cup Pt.
11	858-E	1	SPRING
12	857-JX	1	NUT - Spring Retainer
13	5686	1	BALL BEARING - Thrust
14	868B-KXH	1	SLEEVE - Spindle
15	877-GX8	1	COLLAR - Spindle
16	C-8030	1	BUTTON - Spindle
17		1	NUT -- 7/16-20-Hex.
	X2216		CYLINDER ASSEMBLY Includes
1	X2877	1	CYLINDER ASSEMBLY
2	X1696	1	LINER ASSEMBLY
3	C-6455	1	GASKET - Liner to Cylinder
4	C-6454	3	GROMMET - Liner
5	C-3295	2	NIPPLE - Lube Oil
6	612-R	2	GLAND - Packing
7	610A-RB3	4	GROMMET - Lube Oil Nipple
8	S-2914	2	WASHER - Lube Oil Nipple
	X2259		TUBE ASSEM. - H.P. FUEL(3/8 O.D. x 18 LG.)Includes
*		1	TUBE
*		2	SLEEVE
*		2	NUT
	X2260		TUBE ASSEM.-H.P. FUEL(3/8 O.D. x 42 LG.) Includes
*		1	TUBE
*		2	SLEEVE
*		2	NUT
	X2261		TUBE ASSEM.-H.P. FUEL(3/8 O.D. x 104 LG.) Includes
*		1	TUBE
*		2	SLEEVE
*		2	NUT
	X2262		TUBE ASSEM.-H.P. FUEL(3/8 O.D. x 165 LG.) Includes
*		1	TUBE
*		2	SLEEVE
*		2	NUT
	X2308		BRACE ASSEM. - GAGE BOARD TO FUEL RAIL & CYL. HEAD -Includes
*		1	BRACE
*		1	CAP
1		2	CAPSCREW -- 3/8-16 x 1 Lg.

ASSEM. LIST NEGATIVE NO. A-49 15x19 2

ATLAS IMPERIAL DIESEL ENGINE CO. SUB-ASSEMBLY LIST

ALWAYS GIVE--ENGINE NO.--PART NAME--PART NO. OR COMPLETE DESCRIPTION AND SIZE
DO NOT ORDER PARTS BY REFERENCE NUMBERS
* INDICATES PARTS NOT SERVICED INDIVIDUALLY

REF. NO.	PART NO.	NO. REQD.	DESCRIPTION
	X2492		CAGE ASSEM. - H.P. FUEL PUMP DISCHARGE VALVE Includes
*		1	CAGE
*		1	SEAT
	X2493		HEAD ASSEM. - H.P. FUEL PUMP Includes
*		1	HEAD
1	2C1833L 1/8	1	PIPE PLUG
2	2C1833L 1/2	1	PIPE PLUG
	X2494		SEAL ASSEM. - CRANKSHAFT OIL Includes
*		1	SEAL (Lower Half)
*		1	SEAL (Upper Half)
1	C-9226	2	GASKET (Lower Half to Upper Half)
2		4	CAPSCREW -- 1/2-13 x 2 Lg.
2		4	NUT -- 1/2-13-Hex.
2		4	LOCKWASHER -- 1/2 SAE Reg.
	X2495		BASE ASSEMBLY Includes
*		1	BASE
1		2	PIPE PLUG(Oil Sump)-1" Std.-C't's'k. Hd.
2		1	PIPE PLUG -- 1 1/2" Std. - C't's'k. Hd.
3	C-8131	9	CONNECTOR - Crank. Brg. Oil Tube (& Brg. Shell Dowel)
4	C-2120L11	36	STUD - Crankshaft Bearing Cap
5	727-HX	24	STUD - Base, Centerframe & Cylinder
6	S-181	4	STUD - Base & Centerframe (End)
7	C-2016L3 3/4	28	STUD - Base & Centerframe (Short)
8	C-2024L5 3/4	6	STUD - Base Extension
9	W-955	8	CAP - Crankshaft Bearing
10	W-1243	1	CAP - Crankshaft Bearing (Short)
11	C-8139	36	NUT - Crankshaft Bearing Cap
11		36	COTTER PIN -- 3/16 x 2 1/4 Lg.
	X2496		ECCENTRIC ASSEM.-AIR COMP. & WATER PUMP Includes
*		1	ECCENTRIC (Lower Half)
*		1	ECCENTRIC (Upper Half)
1	C-8158	2	PIN - Dowel (Lower Half to Upper Half)
2	C-2112L5 1/4	2	STUD (Lower Half to Upper Half)
3	S-2713	2	NUT - Eccentric Stud
3		2	COTTER PIN -- 1/8 x 1 1/2 Lg.
4	C-2112L5	2	STUD - Eccentric (Lower Half to Upper Half)
5		2	CASTLE NUT -- 3/4-16-Hex.
5		2	COTTER PIN -- 1/8 x 1 1/4 Lg.
	X2497		STRAP ASSEM. - WATER PUMP ECCENTRIC Includes
*		1	STRAP (Con. Rod Side)
*		1	STRAP
1	C-9230-B	4	SHIM (1/32)
1	C-9230-D	10	SHIM (.010)
1	C-9230-E	8	SHIM (.003)
2	C-2612L10	2	BOLT
3		2	CASTLE NUT -- 3/4-16-Hex.
3		2	COTTER PIN -- 1/8 x 1 1/4 Lg.
4	C-2112L3 1/4	2	STUD - Connect. Rod
	X2498		ROD ASSEM. - WATER PUMP CONNECTING Includes
*		1	ROD
1	C-9231	1	BUSHING
	X2499		SEAL ASSEM.-WATER PUMP PISTON ROD OIL Includes
*		2	SEAL
1	C-9235	2	GASKET
2		2	CAPSCREW -- 1/4-20 x 1 Lg.
2		2	NUT -- 1/4-20-Hex.
2		2	LOCKWASHER -- 1/4 SAE Reg.
	X2500		BEARING ASSEM. - CAMSHAFT (INT. THRUST) Includes
*		1	BEARING
1	C-8403	1	BUSHING
	X2503		BEARING ASSEM. - CAMSHAFT (INTERMEDIATE) Includes
*		1	BEARING
1	C-8199	1	BUSHING
	X2505		STRAP ASSEM. - AIR COMPRESSOR ECCENTRIC -Includes
*		1	STRAP (Lower Half)
*		1	STRAP (Upper Half)
1	C-9242-B	4	SHIM (1/32)
1	C-9242-D	10	SHIM (.010)
1	C-9242-E	8	SHIM (.003)
2	C-2616L14 1/4	2	BOLT
2	C-1773	2	NUT - Eccentric Strap Bolt
2		2	COTTER PIN -- 1/8 x 1 3/4 Lg.
3	C-2116L4	2	STUD - Connect. Rod
	X2510		ROD ASSEM. - AIR COMPRESSOR CONNECTING Includes
*		1	ROD
1	C-9241	1	BUSHING
2		1	PIPE PLUG -- 3/8 Std. - C't's'k. Hd.
	X2513		STRAINER ASSEM. - LUBE OIL SUMP Includes
*		1	BODY
*		1	SCREEN (Side)
*		1	SCREEN (Bottom)
	X2520		BEARING ASSEM. - LATCH SHAFT Includes
*		1	BEARING
1	C-9272	1	BUSHING
	X2531		HOUSING ASSEM. - PUMP DRIVE Includes
*		1	HOUSING
1	C-8160	1	BUSHING
	X2532		CYLINDER ASSEM. - AIR COMPRESSOR Includes
*		1	CYLINDER
1		5	PIPE PLUG -- 1 Std. - C't's'k. Hd.
2		1	REDUCING BUSH.(Air Compart.)-3/4 x 1/2 Std.
3		2	PIPE PLUG -- 1/2 Std. - C't's'k. Hd.-(Brass)
4	C-5512L6 1/4	10	STUD - Cyl. Head
5	C-5512L7 1/2	4	STUD - Valve Chamber
	X2533		HEAD ASSEM. - AIR COMP. CYLINDER Includes
1	X2534	1	HEAD ASSEMBLY
2	C-9258	2	VALVE - Suction
3	C-9261	2	SPRING - Suction Valve
4	C-9262	2	NUT - Suction Valve Spring Retainer
4		2	COTTER PIN -- 1/8 x 1 Lg.
5	F-5747	2	GUIDE - Discharge Valve
6	C-9267	2	GASKET - Discharge Valve Guide to Head
7	C-9257	2	VALVE - Discharge
8	C-9265	2	WASHER - Discharge Valve Spring Retainer
9		2	CASTLE NUT -- 3/8-24-Hex.
9		2	COTTER PIN -- 1/16 x 3/4 Lg.
10	2C1437	2	SPRING - Discharge Valve
11	C-9263	2	RETAINER - Discharge Valve Spring & Guide
12	C-9266	1	GASKET - Retainer to Valve Guide
13	C-9244	1	FLANGE - Discharge Valve Guide Retainer
14		4	NUT -- 5/8-11-Hex.
15	2C2595L2 1/4	2	SCREW - Valve Guide Retainer
15		2	HALF NUT -- 3/4-10-Hex.
	X2534		HEAD ASSEM. - AIR COMP. CYLINDER Includes
*		1	HEAD
1		3	PIPE PLUG -- 1 Std. - C't's'k. Hd.
2	C-5510L2 1/2	3	STUD - Suction Valve Unloader Adaptor
3	C-5510L2 3/4	4	STUD - Discharge Valve Retainer Flange
4	C-9246	2	GUIDE - Suction Valve
	X2535		PIPE ASSEM. - AIR COOLER OUTER Includes
*		1	PIPE
*		1	PLUG
	X2536		CHAMBER ASSEM.-AIR COMP. VALVE(#2 STAGE) Includes
1	X2537	1	CHAMBER ASSEMBLY
2	X2538	1	CAGE ASSEM. - Suction Valve
3	C-9268	1	GASKET - Cage to Valve Chamber
4	C-9269	1	VALVE - Suction
5	C-9261	1	SPRING - Suction Valve
6	C-9262	1	NUT - Suction Valve Spring Retainer
6		1	COTTER PIN -- 1/8 x 1 Lg.
7	C-9256	1	RETAINER - Suction Valve Cage
8	F-5747	1	GUIDE - Discharge Valve
9	C-9267	1	GASKET - Guide to Valve Chamber
10	C-9257	1	VALVE - Discharge
11	C-9265	1	WASHER - Discharge Valve Spring Retainer
12		1	CASTLE NUT -- 3/8-24-Hex.
12		1	COTTER PIN -- 1/16 x 3/4 Lg.
13	2C1437	1	SPRING - Discharge Valve
14	C-9263	1	RETAINER - Discharge Valve Spring & Guide
15	C-9266	1	GASKET - Retainer to Valve Guide
16	C-9245	2	COVER - Valve Chamber Top & Bottom
17		1	PIPE PLUG -- 1/8 Std. (Brass)
18	C-9260	2	GASKET - Cover
19		8	NUT -- 3/4-10-Hex.
20	2C2594L2 3/4	2	SCREW - Valve Guide Retainer
20		2	HALF NUT -- 1-8-Hex.
21	C-9045-P 1/8	1	COCK - Drain
	X2537		CHAMBER ASSEM.-AIR COMP. VALVE(#2 STAGE) Includes
*		1	CHAMBER
1		1	PIPE PLUG -- 1 Std. - C't's'k. Hd.
2		1	PIPE PLUG -- 3/8 Std. - (Brass)
3	C-5512L3 3/4	8	STUD - Cover
	X2538		CAGE ASSEM.-AIR COMP. SUCT. VALVE(#2 STAGE) Includes
*		1	CAGE
1	C-9246	1	GUIDE
	X2539		PIN ASSEM. - PISTON Includes
*		1	PIN
1	S-3120	1	PIN - Dowel

ATLAS IMPERIAL DIESEL ENGINE CO.

SUB-ASSEMBLY LIST

ALWAYS GIVE - ENGINE NO. - PART NAME - PART NUMBER OR COMPLETE DESCRIPTION AND SIZE
DO NOT ORDER PARTS BY REFERENCE NUMBERS
* INDICATES PARTS NOT SOLD INDIVIDUALLY

NEG. No. AL50 2 14½x18
ISSUE No. 15x19
ENG. SIZE

REF. No.	PART NUMBER	NO. REQD	DESCRIPTION	
	X2540		PUSH-ROD ASSEM. - FUEL SPRAY VALVE	Includes
*		1	TUBE	
*		1	PLUG	
1	C-8213	1	SOCKET - Adjust. Screw	
2		1	COTTER PIN -- 3/16 x 1 1/2 Lg.	
	X2541		PUSH-ROD ASSEM. - INLET & EXHAUST VALVE	Includes
*		1	TUBE	
*		1	WASHER - Spring	
*		1	PLUG	
*		1	SOCKET	
	X2542		LIFTER ASSEM. - AIR STARTING VALVE	Includes
*		1	LIFTER	
1	C-9297	1	ROLLER - Lifter	
2	C-9304	1	PIN - Lifter	
3	C-9306	1	EXTENSION - Valve Lifter	
4	C-7972L2 1/2	1	PIN - Extension to Lifter	
	X2543		LIFTER ASSEM. - INLET & EXHAUST VALVE	Includes
*		1	LIFTER	
1	C-9296	1	ROLLER	
2	C-9303	1	PIN	
	X2545		CENTERFRAME ASSEMBLY	Includes
*		1	CENTERFRAME	
2	C-5516L4	4	STUD - Air Compressor Cylinder	
	X2546		CENTERFRAME ASSEMBLY	Includes
*		1	CENTERFRAME	
2	C-5516L4	4	STUD - Air Compressor Cylinder	
	X2547		BODY ASSEM. - WATER PUMP	Includes
*		1	BODY	
1		4	PIPE PLUG -- 1/4 Std. - (Brass)	
2	C-9253	1	LINER - Pump Body	
3	C-2012L3 1/4	4	STUD - Cross-head Guide	
4	C-2006L1 3/4	6	STUD - Stuffing Box	
5	C-2006L1 3/4	6	STUD - End Cover	
6	C-5410L2 5/8	4	STUD - Valve Plate (Center)	
7	C-2010L4	10	STUD - Bottom Cover & Valve Plate	
8	C-2010L5 5/8	10	STUD - Top Cover & Valve Plate	
	X2548		PLATE ASSEM. - WATER PUMP VALVE	Includes
1	W-1249	1	PLATE	
2	C-9328-P	6	VALVE	
	X2549		COVER ASSEM. - WATER PUMP BODY BOTTOM	Includes
*		1	COVER	
1	C-2010L2 1/2	8	STUD	
	X2550		COVER ASSEM. - WATER PUMP BODY TOP	Includes
*		1	COVER	
1	C-2010L2 1/2	8	STUD	

REF. No.	PART NUMBER	NO. REQD	DESCRIPTION	
	X2551		LIFTER ASSEM. - FUEL SPRAY VALVE	Includes
*		1	LIFTER	
1	S-2447	1	PIN - Fuel Wedge	
2	C-3292	1	WASHER - Lifter Spring	
3	S-2255	1	PIN - Lifter Guide	
4	884-E	1	ROLLER	
5	S-3032	1	PIN - Roller	
	X2552		CYLINDER ASSEM. - FLYWHEEL AIR BRAKE	Includes
*		1	CYLINDER	
1	C-9341	1	LINER	
2	C-9342	1	LINING	
3		16	RIVETS--3/16 Dia. x 1 Lg.-Tubular-(Brass)	
	X2553		CRANK ASSEM. - HIGH PRESS. FUEL PUMP	Includes
*		1	CRANK	
1		1	PIPE PLUG -- 1/8 Std.	
	X2554		LATCH ASSEM. - FUEL SPRAY VALVE	Includes
*		1	LATCH	
1	884-E	2	ROLLER	
2	C-9305	2	PIN	
	X2555		LATCH ASSEM. - INLET & EXHAUST VALVE	Includes
1	X2601	2	BAR ASSEM. - Latch Side	
2	C-9293	1	ROLLER (Ahead)	
3	C-9277	1	SPACER - Roller (Ahead)	
4	C-9294	1	ROLLER (Astern)	
5	C-9323	1	SPACER - Roller (Astern)	
6	C-9298	3	PIN - Side Bar & Roller	
7	C-9321	6	NUT - Side Bar Retainer	
7		6	COTTER PIN -- 1/8 x 1 1/4 Lg.	
	X2556		LATCH ASSEM. - AIR STARTING	Includes
1	X2601	2	BAR ASSEM. - Latch Side	
2	C-9295	2	ROLLER	
3	C-9332	2	SPACER - Roller	
4	C-9299	3	PIN - Side Bar & Roller	
5	C-9321	6	NUT - Side Bar Retainer	
5		6	COTTER PIN -- 1/8 x 1 1/4 Lg.	
	X2557		LATCH ASSEM. - FUEL SPRAY VALVE	Includes
*		1	LATCH	
1	884-E	2	ROLLER	
2	C-9305	2	PIN	
	X2558		HOUSING ASSEM. - REVERSING RACK	Includes
*		1	HOUSING	
1	C-9365	1	BUSHING - Pinion Shaft (Small)	
2	C-9366	1	BUSHING - Pinion Shaft (Large)	
	X2559		LINK ASSEM. - LATCH SHAFT CONTROL	Includes
*		1	LINK	
1	C-9367	2	BUSHING	
	X2560		ADAPTOR ASSEM. - LUBE OIL SUMP PUMP	Includes
*		1	ADAPTOR	
1	C-9386	2	BUSHING	

ASSEM. LIST NEGATIVE NO. AL 51 5x19

ATLAS IMPERIAL DIESEL ENGINE CO. SUB-ASSEMBLY LIST

ALWAYS GIVE--ENGINE NO.--PART NAME--PART NO. OR COMPLETE DESCRIPTION AND SIZE
DO NOT ORDER PARTS BY REFERENCE NUMBERS
* INDICATES PARTS NOT SERVICED INDIVIDUALLY

REF. NO.	PART NO.	NO. REQD.	DESCRIPTION
	X2561		CRANK ASSEM. - BILGE PUMP DRIVE Includes
*		1	DISC
*		1	PIN - Drive Crank
1	C-8011L 3/8	1	PIN - Lock
	X2562		COVER ASSEM. - CAMSHAFT BEARING END Includes
*		1	COVER
1		1	OIL SEAL--National Motor Brg. Co. No. 55013
	X2563		PIN ASSEM.-DOUBLE ACT. WATER PUMP CROSS-HEAD Includes
*		1	PIN
1	C-9233	2	PLUG
	X2564		MANIFOLD ASSEM. - AIR INLET Includes
*		1	MANIFOLD
*		6	FLANGE
	X2565		ROD ASSEM. - BILGE PUMP CONNECTING Includes
*		1	ROD
1	C-9399	1	BUSHING
2		3	EXCUTCHEON PIN--No. 10 x 1 3/4 Lg.(Brass)
	X2566		PUMP ASSEM.-BILGE Includes
1	X2567	1	BODY ASSEMBLY
2	G261-29	1	PLUNGER ASSEMBLY
3	262-29	1	GLAND - Packing
4		4	PACKING -- 1/2 Sq. x 12 3/4 Lg.-(Flax - Belmont #552)
5		4	NUT -- 1/2-13-Hex. - (Brass)
	X2567		BODY ASSEM. - BILGE PUMP Includes
*		1	BODY
1	C-8655	2	STUD - Packing Gland
2		1	PIPE PLUG--1 1/4 Std. - C't's'k. Hd.-(Brass)
	X2568		GUIDE ASSEM. - REVERSING RACK Includes
*		1	GUIDE
1	C-9389	1	BUSHING
	X2569		BRACKET ASSEM. - RACK INTERLOCK Includes
*		1	BRACKET
1	C-9389	1	BUSHING
	X2570		BRACKET ASSEM. - RACK INTERLOCK Includes
*		1	BRACKET
1	C-9389	1	BUSHING
	X2571		HOUSING ASSEM. - REVERSING RACK Includes
*		1	HOUSING
1	C-9365	1	BUSHING - Pinion Shaft (Small)
2	C-9366	1	BUSHING - Pinion Shaft (Large)
	X2572		MANIFOLD ASSEM. - CAMSHAFT BEARING OIL Includes
*		1	PIPE
*		1	TEE (Inlet)
*		6	TEE (Outlet)
	X2573		VALVE ASSEM.-AIR STARTING MANIFOLD AIR Includes
1	X2574	1	BODY ASSEMBLY
2	F-5683	1	VALVE
3	C-9411-P3 1/2	2	RING - Air Valve Piston
4	C-9098	1	SPRING - Air Valve
6	F-5684	1	COVER
7	C-9100	1	GASKET - Cover
8		4	NUT -- 5/8-11-Hex.
9	C-9099	1	COVER - Valve Body Vent
10		2	CAPSCREW -- 1/4-20 x 3/4 Lg.
10		2	LOCKWASHER -- 1/4 SAE Reg.
	X2574		BODY ASSEM.-AIR START. MANIFOLD AIR VALVE-Includes
*		1	BODY
1	C-5510L2 1/2	4	STUD - Cover
2	C-9536	1	BUSHING - Valve Stem
3	C-9537	1	BUSHING - Valve
	X2575		CAGE ASSEM. - GOVERNOR SPRING Includes
*		1	CAGE
1	C-9428	1	PLUG - Adaptor
2	S-2301	1	PIN - Adaptor Plug Retainer
3	C-9436	2	STUD - Gov. Verticle Shaft Fork
	X2576		BODY ASSEM. - GOVERNOR Includes
*		1	BODY
1	C-9433	1	GEAR - Governor Drive
2		1	WOODRUFF KEY -- 5/32 x 5/8 Std.
3	C-9435	1	COLLAR - Retainer
4		2	TAPER PIN -- #2 x 2 1/4 Lg.
	X2577		GUIDE ASSEM. - REVERSING RACK Includes
*		1	GUIDE
1	C-9389	1	BUSHING
	X2578		WEIGHT ASSEM. - GOVERNOR Includes
*		1	WEIGHT
1	C-9445	1	ROLLER
2	S-1537	1	PIN - Roller
	X2579		QUILL ASSEM. - GOVERNOR THRUST Includes
*		1	QUILL
*		1	SLEEVE
	X2580		LIFTER ASSEM.-RACK INTERLOCK SAFETY PIN Includes
*		1	LIFTER
1	C-9415	1	ROLLER
2	C-9457	1	PIN - Roller
	X2581		PIN ASSEM. - RACK STOP Includes
*		1	PIN
1	C-254	1	PIN - Guide
	X2582		COLLAR ASSEM.-LATCH SHAFT CONTROL CRANK RETAINER Includes
*		1	COLLAR
1	C-9459	1	PIN - Indicator
	X2583		BRACKET ASSEM. - ENGINE CONTROL VALVE Includes
*		1	BRACKET
1	C-231	1	BUSHING
	X2584		BRACKET ASSEM. - ENGINE CONTROL VALVE Includes
*		1	BRACKET
1	C-231	1	BUSHING
	X2585		LEVER ASSEM.-GOV. SPRING ADJUST. & CONT. Includes
*		1	LEVER
1	C-9467	1	BUSHING
	X2586		MANIFOLD ASSEM.-VALVE CAGE WATER INLET Includes
*		1	PIPE
1		2	TEE(Man. End)--1 x 1 x 1/4 Std. Reduc.(Brass)
2	C-8261	4	TEE (Outlet)
3	C-1778	1	TEE (Inlet)
	X2587		MANIFOLD ASSEM.-EXHAUST VALVE CAGE WATER INLET Includes
*		1	PIPE
1		1	TEE(Man. End)--1 x 1 x 1/4 Std. Reduc.(Brass)
2	C-8261	5	TEE (Outlet)
3	C-1778	1	TEE (Inlet)
	X2588		MANIFOLD ASSEM.-EXHAUST VALVE CAGE WATER OUTLET Includes
*		1	PIPE
1		2	TEE(Man. End)--1 x 1 x 1/4 Std. Reduc.(Brass)
2	C-8261	5	TEE (Inlet)
	X2589		MANIFOLD ASSEM.-EXHAUST VALVE CAGE WATER OUTLET Includes
*		1	PIPE
1		2	TEE(Man. End)--1 x 1 x 1/4 Std. Reduc.(Brass)
2	C-8261	5	TEE (Inlet)
	X2590		MANIFOLD ASSEM. - CYL. HEAD SPRAY VALVE COOLING Includes
*		1	PIPE
1	C-1778	1	TEE (Inlet)
2	C-3623	11	TEE (Outlet)
	X2591		SLEEVE ASSEM. - WEDGE SHAFT CONTROL Includes
*		1	SLEEVE
*		1	GUIDE

ASSEM. LIST NEGATIVE NO. AL 52 SA 9

ATLAS IMPERIAL DIESEL ENGINE CO. SUB-ASSEMBLY LIST

ALWAYS GIVE--ENGINE NO.--PART NAME--PART NO. OR COMPLETE DESCRIPTION AND SIZE
DO NOT ORDER PARTS BY REFERENCE NUMBERS
* INDICATES PARTS NOT SERVICED INDIVIDUALLY

REF. NO.	PART NO.	NO. REQD.	DESCRIPTION
	X2592		PLUG ASSEM.-WEDGE SHAFT CONTROL SLEEVE Includes
		1	PLUG
1	C-8408	1	JOINT - Ball & Socket
2		1	CAPSCREW -- 3/8-24 x 7/8 Lg.
	X2593		PLATE ASSEM. - ENGINE CONTROL VALVE Includes
*		1	PLATE
1	C-8265L 3/4	2	PIN - Dowel
	X2594		HANDLE ASSEM. - ENGINE CONTROL Includes
*		1	HANDLE
1	C-9441	1	PAWL
2	C-9406	1	ROD - Pawl
3		1	COTTER PIN -- 1/8 x 3/4 Lg.
4	572-GX8	1	SPRING - Pawl
5	C-9405	1	CAM - Pawl
6	C-7972L1 1/8	1	PIN - Cam
7	C-9404	1	ROD - Cam Control
8	C-9402	1	BUTTON - Cam Control Rod
	X2595		JOINT ASSEM. - BALL & SOCKET Includes
1	C-8408	2	JOINT
2	C-9491	1	STUD
	X2596		SLEEVE ASSEM. - WEDGE SHAFT CONTROL Includes
*		1	SLEEVE
1	C-9475	1	STUD
	X2597		DISC ASSEM. - ENGINE CONTROL VALVE Includes
*		1	DISC
1		1	PLUG -- Welch Expansion - 1 3/16 Dia.
	X2598		BODY ASSEM. - GOVERNOR Includes
1	X2576	1	BODY ASSEMBLY
2	C-548	1	PIN - Quill Guide
3	X2579	1	QUILL ASSEMBLY
4	X2578	2	WEIGHT ASSEMBLY
5	C-9448	2	PIN - Weight to Body
5		4	COTTER PIN -- 1/8 x 7/8 Lg.
6		4	PLAIN WASHER -- 9/16 SAE Std.
7	C-9498-P	1	BALL BEARING
	X2599		RAIL ASSEM. - FUEL Includes
*		1	TUBE - Fuel Rail
1	1205-E1	7	BODY - Isolating Valve
2	1205C-E	7	SEAT - Isolating Valve
3	1205D-E	7	PLUG - Isolating Valve
4	1206-C31	7	STEM - Isolating Valve
5		21	PACKING -- 1/2 O.D. x 1/4 I.D. x 1/4 Wide - Garlock #333
6	866-E	7	GLAND - Packing
7	1208-C3	7	NUT - Packing Gland
8	1200B-FXC4	2	ELBOW - Fuel Rail (End)
9		2	PIPE PLUG -- 1/4 Std. - C't's'k. Hd.
	X2600		RAIL ASSEM. - FUEL Includes
5		21	PACKING -- 1/2 O.D. x 1/4 I.D. x 1/4 Wide - Garlock #333
6	866-E	7	GLAND - Packing
7	1208-C3	7	NUT - Packing Gland
8	1200B-FXC4	2	ELBOW - Fuel Rail (End)
9		2	PIPE PLUG -- 1/4 Std. - C't's'k. Hd.
	X2601		BAR ASSEM. - LATCH SIDE Includes
*		1	BAR
1	C-9423	1	BUSHING
	X2604		TUBE ASSEM.-H.P. FUEL(3/8 O.D. x 54 LG.) Includes
*		1	TUBE
*		2	SLEEVE
*		2	NUT
	X2607		GEAR ASSEM. - INTERMEDIATE Includes
*		1	HUB
*		1	RING
1		2	CAPSCREW -- 1/2-13 x 1 1/4 Lg.
2	C-9530	2	BUSHING

REF. NO.	PART NO.	NO. REQD	DESCRIPTION
	X2611		HANDLE ASSEM. - ENGINE CONTROL Includes
*		1	HANDLE
1	C-9545	1	PAWL
2	C-9406	1	ROD - Pawl
3		1	COTTER PIN -- 1/8 x 3/4 Lg.
4	572-GX8	1	SPRING - Pawl
5	C-9405	1	CAM - Pawl
6	C-7972L1 1/8	1	PIN - Cam
7	C-9543	1	PLUNGER - Cam Control
8	C-9544	1	GUIDE - Plunger
9	X2873	1	LOCK ASSEM. - Pawl
10		1	CAPSCREW -- 5/16-18 x 1/2 Lg. - Flat Hd.
	X2617		NIPPLE ASSEM. - AIR STARTING MANIFOLD Includes
*		1	NIPPLE
*		1	COUPLING
	X2636		LATCH ASSEM. - FUEL SPRAY VALVE Includes
*		1	LATCH
1	884-E	2	ROLLER
2	C-9305	2	PIN
	X2637		BRACKET ASSEM. - RACK CONTROL CYL. AIR TUBE Includes
*		1	BRACKET
*		1	CAP
1		1	MACHINE SCREW -- 1/4-20 x 3/4 Lg.-Rnd. Hd.
1		1	NUT -- 1/4-20-Hex.
1		1	LOCKWASHER -- 1/4 SAE Reg.
	X2638		CAGE ASSEM. - GOVERNOR SPRING Includes
*		1	CAGE
1	C-9577	1	PLUG - Adaptor
2	S-2301	1	PIN - Plug Retainer
3	C-9436	2	STUD - Verticle Shaft Fork
	X2639		LEVER ASSEM. - GOV. SPRING ADJUST. & CONTROL Includes
*		1	LEVER
1	C-9467	1	BUSHING
	X2642		GEAR ASSEM. - CRANKSHAFT Includes
*		2	GEAR (Halves)
1	S-3135	2	PIN - Dowel
	X2643		CLAMP ASSEM. - CRANKSHAFT GEAR Includes
*		2	CLAMP
1	C-2612L9	2	BOLT
1		2	CASTLE NUT -- 3/4-16-Hex.
1		2	COTTER PIN -- 1/8 x 1 1/4 Lg.
	X2644		BEARING ASSEM. - CONNECT. ROD CRANK PIN Includes
*		1	BEARING (Lower Half)
*		1	BEARING (Upper Half)
1	C-9590-B	4	SHIM (1/32)
1	C-9590-D	10	SHIM (.010)
1	C-9590-E	8	SHIM (.003)
2	C-2508L2	2	CAPSCREW
3		2	CASTLE NUT -- 1/2-20-Hex.
3		2	COTTER PIN -- 3/32 x 1 Lg.
	X2645		CRANK - CONNECTING ROD Includes
*		1	ROD
1	C-8158	2	PIN - Dowel (Lower to Upper Half)
2	C-2112L5 1/2	2	STUD (Lower to Upper Half)
3	S-2713	2	NUT
3		2	COTTER PIN -- 1/8 x 1 1/2 Lg.
4	C-2112L5 1/4	2	STUD - (Lower to Upper Half)
5		2	CASTLE NUT -- 3/4-16-Hex.
5		2	COTTER PIN -- 1/8 x 1 1/4 Lg.
	X2646		PIN ASSEM. - PISTON Includes
*		1	PIN
1	S-2302	1	PIN - Dowel
	X2647		BASE ASSEMBLY Includes
*		1	BASE
1		2	PIPE PLUG(Oil Sump)--1" Std.-C't's'k. Hd.
2		1	PIPE PLUG -- 1 1/2 Std. - C't's'k. Hd.
3	C-8131	9	CONNECTOR - Crank. Brg. Oil Tube
4	C-2120L11	36	STUD - Crankshaft Bearing Cap
5	727-HX	24	STUD - Base, Centerframe & Cylinder
6	S-181	4	STUD - Base & Centerframe (End)
7	C-5516L3 3/4	28	STUD - Base & Centerframe (Short)
8	C-2024L5 3/4	6	STUD - Base Extension
9	W-955	8	CAP - Crankshaft Bearing
10	W-1243	1	CAP - Crankshaft Bearing (Short)
11	C-8139	36	NUT - Crankshaft Bearing Cap
11		36	COTTER PIN -- 3/16 x 2 1/4 Lg.

ASSEM. LIST NEGATIVE NO. AL53 15x19

ATLAS IMPERIAL DIESEL ENGINE CO. SUB-ASSEMBLY LIST

ALWAYS GIVE--ENGINE NO.--PART NAME--PART NO. OR COMPLETE DESCRIPTION AND SIZE
DO NOT ORDER PARTS BY REFERENCE NUMBERS
* INDICATES PARTS NOT SERVICED INDIVIDUALLY

REF. NO.	PART NO.	NO. REQD.	DESCRIPTION	
	X2648		ROCKER ASSEM. - FUEL SPRAY VALVE (LONG)	Includes
*		1	ROCKER	
1	590A-HX	2	BUSHING	
2	C-8294	1	BUTTON	
3	C-9580	1	SCREW - Adjusting	
4		1	CAPSCREW -- 1/2-13 x 1 1/2 Lg.	
	X2649		BODY ASSEM. - WATER PUMP	Includes
*		1	BODY	
1		4	PIPE PLUG -- 1/4 Std. - (Brass)	
2	C-9596	1	LINER - Cylinder	
3	C-5412L3 1/4	4	STUD - Cross-Head Guide	
4	C-5406L1 3/4	6	STUD - Stuffing Box	
5	C-5406L1 3/4	6	STUD - End Cover	
6	C-5410L2 5/8	4	STUD - Valve Plate (Center)	
7	C-5410L4	10	STUD - Bottom Cover & Valve Plate	
8	C-5410L5 5/8	10	STUD - Top Cover & Valve Plate	
	X2650		QUILL ASSEM. - GOVERNOR	Includes
*		1	QUILL	
*		1	SLEEVE	
	X2651		ROD ASSEM. - CONNECTING	Includes
*		1	ROD	
1	F-5877	1	BUSHING	
2		1	PIPE PLUG -- 1/2 Std.	
	X2652		BODY ASSEM. - GOVERNOR	Includes
1	X2576	1	BODY ASSEMBLY	
2	C-548	1	PIN - Quill Guide	
3	X2650	1	QUILL ASSEMBLY	
4	X2578	2	WEIGHT ASSEMBLY	
5	C-9448	2	PIN - Weight	
5		4	COTTER PIN -- 1/8 x 7/8 Lg.	
6		4	PLAIN WASHER -- 9/16 SAE Std.	
7	C-9498-P	1	BALL BEARING	
	X2653		CYLINDER ASSEMBLY	Includes
1	X2654	1	CYLINDER ASSEMBLY	
2	X2655	1	LINER ASSEMBLY	
3	C-9605	1	GASKET - Liner	
4	C-9607	3	GROMMET - Liner	
5	C-3295	2	NIPPLE - Lube Oil	
6	612-R	2	GLAND - Lube Oil Nipple Packing	
7	610A-RB3	4	GROMMET - Lube Oil Nipple	
8	S-2914	2	WASHER - Lube Oil Nipple	
	X2654		CYLINDER ASSEMBLY	Includes
*		1	CYLINDER	
1	C-9608	8	STUD - Cylinder Head	
2	C-1066	8	PIPE - Water By-Pass	
3	605-N	1	COVER - Clean-out	
4	605A-N	1	GASKET - Cover	
5		4	CAPSCREW -- 1/2-13 x 1 1/4 Lg.	
	X2655		LINER ASSEM. - CYLINDER	Includes
*		1	LINER	
1	S-988	1	PIN - Dowel	
	X2656		HEAD ASSEM. - CYLINDER	Includes
1	X2657	1	HEAD ASSEMBLY	
2	X2660	2	VALVE & CAGE ASSEM. - Inlet	
3	X2661	2	VALVE & CAGE ASSEM. - Exhaust	
4	C-2153L4 1/4	4	RING - Piston (Valve Cage Seal)	
5	C-9601	4	GASKET - Valve Cage	
6	C-8229	6	SPACER - Exhaust Valve Cage Stud	
7		12	NUT -- 3/4-10-Hex.	
8	X389	1	VALVE & CAGE ASSEM. - Air Starting	
9	C-2153L3	2	RING - Piston (Valve Cage Seal)	
10	C-174	1	GASKET - Valve Cage	
11		2	NUT -- 7/8-9-Hex.	
	X2657		HEAD ASSEM. - CYLINDER	Includes
*		1	HEAD - Cylinder	
		7	PIPE PLUG -- 1 Std.	
1		1	PIPE PLUG -- 3/8 Std. - C't's'k. Hd.	
2	C-1837	6	STUD - Inlet Valve Cage	
3	C-8228	6	STUD - Exhaust Valve Cage	
4	C-2014L4	2	STUD - Air Starting Valve Cage	
5	S-60	4	STUD - Rocker Shaft Bearing	
6	C-2010L5 3/8	1	STUD - Fuel Spray Valve Rocker Stand	
7	854A-JX	1	STUD - Fuel Spray Valve Clamp	
8	C-2012L2 3/4	4	STUD - Exhaust Manifold Elbow	
9	C-3147	2	NOZZLE - Spray Valve Cooling	
10	621A-F	3	PIN - Dowel (Valve Yoke Stand & S. Valve)	
11	C-8214	2	COVER - Clean-out (Blind)	
12	C-8216	1	COVER - Clean-out (Tapped)	
13	C-8215	3	GASKET - Cover	
14		12	CAPSCREW -- 1/2-13 x 1 Lg.	
	X2658		HEAD ASSEM. - CYLINDER	Includes
1	X2659	1	HEAD ASSEMBLY	
2	X2660	2	VALVE & CAGE ASSEM. - Inlet	
3	X2661	2	VALVE & CAGE ASSEM. - Exhaust	
4	C-2153L4 1/4	4	RING - Piston (Valve Cage Seal)	
5	C-9601	4	GASKET - Valve Cage	
6	C-8229	6	SPACER - Exhaust Valve Cage Stud	
7		12	NUT -- 3/4-10-Hex.	
8	X389	1	VALVE & CAGE ASSEM.-Air Starting	
9	C-2153L3	2	RING - Piston (Valve Cage Seal)	
10	C-174	1	GASKET - Valve Cage	
11		2	NUT -- 7/8-9-Hex.	
	X2659		HEAD ASSEM. - CYLINDER	Includes
*		1	HEAD - Cylinder	
		7	PIPE PLUG -- 1 Std.	
1		1	PIPE PLUG -- 3/8 Std. - C't's'k. Hd.	
2	C-1837	6	STUD - Inlet Valve Cage	
3	C-8228	6	STUD - Exhaust Valve Cage	
4	C-2014L4	2	STUD - Air Starting Valve Cage	
5	S-60	4	STUD - Rocker Shaft Bearing	
6	C-2010L5 3/8	1	STUD - Fuel Spray Valve Rocker Stand	
7	854A-JX	1	STUD - Fuel Spray Valve Clamp	
8	C-2012L2 3/4	4	STUD - Exhaust Manifold Elbow	
9	C-3147	2	NOZZLE - Spray Valve Cooling	
10	621A-F	3	PIN - Dowel (Valve Yoke Stand & S. Valve)	
11	C-8214	2	COVER - Clean-out (Blind)	
12	C-8216	1	COVER - Clean-out (Tapped)	
13	C-8215	3	GASKET - Cover	
14		12	CAPSCREW -- 1/2-13 x 1 Lg.	
	X2660		VALVE & CAGE ASSEM. - INLET	Includes
1	X2662	1	CAGE ASSEM. - Inlet Valve	
2	C-1822	1	VALVE	
3	C-1820	1	SPRING (Inner)	
4	C-1835	1	SPRING (Outer)	
5	C-1821	1	WASHER - Spring Retainer	
6	C-1842	2	LOCK - Spring Retainer Washer	
7		3	PIPE PLUG -- 1/4 Std.	
	X2661		VALVE & CAGE ASSEM. - EXHAUST	Includes
1	X2662	1	CAGE ASSEM. - Exhaust Valve	
2	C-1823	1	VALVE - Exhaust	
3	C-1820	1	SPRING (Inner)	
4	C-1835	1	SPRING (Outer)	
5	C-1821	1	WASHER - Spring Retainer	
6	C-1842	2	LOCK - Spring Retainer Washer	
		1	PIPE PLUG -- 1/4 Std.	
	X2662		CAGE ASSEM. - INLET & EXHAUST VALVE	Includes
*		1	CAGE	
1	F-3213	1	GUIDE - Valve	
*		3	PIPE PLUG -- 1/2 Std.	
	X2663		LEVER ASSEM. - WEDGE THROW-OUT (UPPER)	Includes
*		1	LEVER	
1	S-2301	1	PIN - Guide	
	X2664		LATCH ASSEM. - FUEL WEDGE HOLD-OUT	Includes
*		1	LATCH	
1	S-988	1	PIN - Spring Guide	
	X2665		LATCH ASSEM. - FUEL WEDGE HOLD-OUT	Includes
*		1	LATCH	
1	S-988	1	PIN - Spring Guide	
	X2666		SHOE ASSEM. - CLUTCH	Includes
*		1	SHOE	
1	C-9633	1	SLEEVE	
2	C-9634	1	LINING	
3		36	SEMI-TUBULAR RIVETS--3/16 Dia. Body x 1 Lg. 1/2 Dia. Head (Brass)	
	X2667		GEAR ASSEM. - TACHOMETER DRIVE (INTERMEDIATE)	Includes
*		1	GEAR	
1	C-9645	1	BUSHING	
	X2670		YOKE ASSEM. - CLUTCH SHOE CONTROL	Includes
*		1	YOKE	
1	S-1262	1	BUTTON	
	X2671		SLEEVE ASSEM. - CLUTCH SHIFTER	Includes
*		2	SLEEVE	
1	C-2712L10	4	BOLT	
2		4	NUT -- 3/4-10-Hex.	
2		4	LOCKWASHER -- 3/4 SAE Reg.	

ASSEM. LIST NEGATIVE NO. AL54 15x19

ATLAS IMPERIAL DIESEL ENGINE CO. SUB-ASSEMBLY LIST

ALWAYS GIVE--ENGINE NO.--PART NAME--PART NO. OR COMPLETE DESCRIPTION AND SIZE
DO NOT ORDER PARTS BY REFERENCE NUMBERS
* INDICATES PARTS NOT SERVICED INDIVIDUALLY

REF. NO.	PART NO.	NO. REQD.	DESCRIPTION	
	X2672		COLLAR ASSEM. - CLUTCH SHIFTER	Includes
*		2	COLLAR	
1	C-8521L10	2	BOLT	
2		2	NUT -- 3/4-10-Hex.	
2		2	LOCKWASHER -- 3/4 SAE Reg.	
3	S-1278	2	PIN	
	X2673		COLLAR ASSEM. - CLUTCH SHOE CONTROL	Includes
*		2	COLLAR	
1	S-1976	2	PIN - Dowel	
2	C-2116L4	2	STUD	
3		2	CASTLE NUT -- 1-14-Hex.	
4		2	COTTER PIN -- 1/8 x 1 3/4 Lg.	
	X2674		EXTENSION ASSEM. - BASE	Includes
*		1	EXTENSION	
1	C-2016L5 1/2	2	STUD - Clutch Shifter Stand	
2	C-2016L15	2	STUD - Clutch Shifter Stand	
	X2675		PUMP ASSEM. - BILGE	Includes
1	X2676	1	BODY ASSEMBLY	
2	X2677	1	PLUNGER ASSEMBLY	
3	262-29	1	GLAND - Packing	
4		4	PACKING--1/2 Sq. x 12 3/4 Lg.(Flax-Belmont #552)	
5		4	NUT -- 1/2-13-Hex. - (Brass)	
	X2676		BODY ASSEM. - BILGE PUMP	Includes
*		1	BODY	
1	C-8655	2	STUD - Packing Gland	
2		1	PIPE PLUG -- 1 1/4 Std. - C't's'k. Hd.(Brass)	
	X2677		PLUNGER ASSEM. - BILGE PUMP	Includes
*		1	PLUNGER	
1		1	PIPE PLUG -- 2 Std. - (Brass)	
	X2678		ROD ASSEM. - BILGE PUMP CONNECTING	Includes
*		1	ROD	
1	C-9399	1	BUSHING	
2		3	ESCUTCHEON PIN -- No. 10 x 1 3/4 Lg.-(Brass)	
	X2679		HOUSING ASSEM. - TACHOMETER DRIVE	Includes
*		1	HOUSING	
1		1	OIL SEAL - National Motor Brg. Co. #55013	
	X2680		BASE ASSEMBLY	Includes
*		1	BASE	
1		2	PIPE PLUG(Oil Sump)--1" Std.-C't's'k. Hd.	
2		1	PIPE PLUG -- 1 1/2 Std. - C't's'k. Hd.	
3	C-8131	9	CONNECTOR - Crank. Brg. Oil Tube	
4	C-2120L11	36	STUD - Crankshaft Bearing Cap	
5	727-HX	24	STUD - Base, Centerframe & Cylinder	
6	S-181	4	STUD - Base & Centerframe (End)	
7	C-2016L3 3/4	28	STUD - Base & Centerframe (Short)	
8	C-2024L5 3/4	6	STUD - Base Extension	
9	W-955	8	CAP - Crankshaft Bearing	
10	W-1243	1	CAP - Crankshaft Bearing (Short)	
11	C-8139	36	NUT - Crankshaft Bearing Cap	
11		36	COTTER PIN -- 3/16 x 2 1/4 Lg.	

REF. NO.	PART NO.	NO. REQD	DESCRIPTION	
	X2681		CENTERFRAME ASSEMBLY	Includes
*		1	CENTERFRAME	
1	C-2010L4 3/4	5	STUD - Fuel Pump Housing	
2	C-5516L4	4	STUD - Air Compressor Cylinder	
	X2682		CENTERFRAME ASSEMBLY	Includes
*		1	CENTERFRAME	
1	C-2010L4 3/4	5	STUD - Fuel Pump Housing	
2	C-5516L4	4	STUD - Air Compressor Cylinder	
	X2683		BODY ASSEM. - OVERSPEED GOVERNOR	Includes
1	F-5914	1	BODY	
2	C-9678	2	PIN - Weight Guide	
3	F-5915	1	WEIGHT	
4	C-9679	1	SCREW - Weight Retainer	
5		1	COTTER PIN -- 1/8 x 1 1/4 Lg.	
6	C-9674	1	BAR - Weight Spring Anchor	
7		10	WASHER (Bar Adj.)--1/2 SAE Std.	
8	C-2408L1 3/4	2	CAPSCREW	
		1	WIRE -- #16 Ga. x 4 Lg.	
9	C-9680	2	SPRING	
10	C-9675	4	PIN - Spring Anchor	
	X2684		LIFTER ASSEM. - OVERSPEED GOVERNOR	Includes
*		1	LIFTER	
1	C-9664	1	ROLLER	
2	S-1976	1	PIN	
	X2694		TUBE ASSEM.-H.P. FUEL(3/8 O.D. x 9 LG.)	Includes
*		1	TUBE	
*		2	SLEEVE	
*		2	NUT	
	X2695		TUBE ASSEM.-H.P. FUEL(3/8 O.D. x 48 LG.)	Includes
*		1	TUBE	
*		2	SLEEVE	
*		2	NUT	
	X2696		TUBE ASSEM.-H.P. FUEL(3/8 O.D. x 178 LG.)	Includes
*		1	TUBE	
*		2	SLEEVE	
*		2	NUT	
	X2697		HANDLE ASSEM. - ENGINE CONTROL	Includes
*		1	HANDLE	
1	C-9545	1	PAWL	
2	C-9406	1	ROD	
3		1	COTTER PIN -- 1/8 x 3/4 Lg.	
4	572-GX8	1	SPRING - Pawl	
5	C-9405	1	CAM - Pawl	
6	C-7972L1 1/8	1	PIN - Cam	
7	C-9543	1	PLUNGER - Cam Control	
8	C-9544	1	GUIDE - Plunger	
9	C-2008L1 3/4	2	STUD - Remote Control Sprocket	
10		1	COTTER PIN(Pawl Lock)--5/32 x 1 3/4 Lg.	
	X2701		MANIFOLD ASSEM. - AIR INLET	Includes
*		1	MANIFOLD	
*		6	FLANGE	

ASSEM. LIST NEGATIVE NO. AL55 15x19

ATLAS IMPERIAL DIESEL ENGINE CO. SUB-ASSEMBLY LIST

ALWAYS GIVE--ENGINE NO.--PART NAME--PART NO. OR COMPLETE DESCRIPTION AND SIZE
DO NOT ORDER PARTS BY REFERENCE NUMBERS
* INDICATES PARTS NOT SERVICED INDIVIDUALLY

REF. NO.	PART NO.	NO. REQD.	DESCRIPTION	
	X2788		HEAD ASSEM. - H.P. FUEL PUMP	Includes
*		1	HEAD	
1	2C1833L 1/8	1	PIPE PLUG	
2	2C1833L 1/2	1	PIPE PLUG	
	X2789		CAGE ASSEM. - FUEL PUMP DISCH. VALVE	Includes
*		1	CAGE	
*		1	SEAT	
	X2802		BASE ASSEMBLY	Includes
*		1	BASE	
1		2	PIPE PLUG(Oil Sump)--1" Std.-C't's'k. Hd.	
2		1	PIPE PLUG -- 1 1/2 Std. - C't's'k. Hd.	
3	C-8131	9	CONNECTOR - Crank. Brg. Oil Tube	
4	C-2120L11	36	STUD - Crankshaft Bearing Cap	
5	727-HX	24	STUD - Base, Centerframe & Cylinder	
6	S-181	4	STUD - Base & Centerframe (End)	
7	C-5516L3 3/4	28	STUD - Base & Centerframe (Short)	
8	C-2024L5 3/4	6	STUD - Base Extension	
9	W-955	8	CAP - Crankshaft Bearing	
10	W-1243	1	CAP - Crankshaft Bearing (Short)	
11	C-8139	36	NUT - Crankshaft Bearing Cap	
11		36	COTTER PIN -- 3/16 x 2 1/4 Lg.	
	X2803		LATCH ASSEM.-ENGINE CONTROL STAND DOOR	Includes
*		1	LATCH	
*		1	STUD	
	X2804		DOOR ASSEM. - ENGINE CONTROL STAND	Includes
*		1	DOOR	
1	S-2173	2	PIN	
	X2805		HANDLE ASSEM. - ENGINE CONTROL	Includes
*		1	HANDLE	
1	C-9545	1	PAWL	
2	C-9897	1	ROD - Pawl	
3		1	COTTER PIN -- 1/8 x 3/4 Lg.	
4	572-GX8	1	SPRING - Pawl	
5	C-9898	1	LEVER - Pawl	
6	C-7972L1 3/8	1	PIN - Lever	
	X2806		VALVE ASSEM. - FUEL PRESSURE RELIEF	Includes
1	G1243-E	1	HANDLE ASSEMBLY	
2	1238A-E	1	PIN - Handle to Bearing	
3		2	COTTER PIN -- 3/32 x 3/4 Lg.	
4	1244-E	1	SECTOR	
5		2	CAPSCREW -- 5/16-18 x 1 1/4 Lg.	
6		2	NUT -- 5/16-18-Hex.	
7	C-9902	1	BEARING - Handle	
8	1237-E1	1	CAGE - Spring	
9	1245-E1	1	PLUG - Spring (Upper)	
10	1236-E	1	SPRING - Relief Valve	
11	1240-E	1	NUT - Spring Adjust. Screw	
12		1	MACHINE SCREW--1/4-20 x 1/2 Lg.-Rnd. Hd.-(Brass)	
13	1239-E	1	SCREW - Spring Adjusting	
14	1233-E	1	STEM - Relief Valve	
15	1234-E	1	SEAT - Valve Stem	
16	1230-E1	1	BODY - Relief Valve	
17	806-E	3	JEWETT PACKING RING -- 7/8 O.D. x 1/2 I.D. x 3/16 Thick	
18	1231A-E	1	RING - Packing Retainer	
19	1231-E2	1	GLAND - Packing	
20	1232-E1	1	STUD - Adaptor	
21		1	HALF NUT -- 1-8-Hex.	
22	1242-E	1	ELBOW - Fuel Inlet	
23	1237A-E	1	CUP - Fuel Drain	
24	C-9903	1	FLANGE - Adaptor	
	C10019	2	LOCKNUT - Relief Valve	
	X2807		PUMP ASSEM. - BILGE	Includes
1	X2808	1	BODY ASSEMBLY	
2	G261-29	1	PLUNGER ASSEMBLY	
3	262-29	1	GLAND - Packing	
4		4	PACKING -- 1/2 Sq. x 12 3/4 Lg.-(Flax - Belmont #552)	
5		4	NUT -- 1/2-13-Hex. - (Brass)	
	X2808		BODY ASSEM. - BILGE PUMP	Includes
*		1	BODY	
1	C-8655	2	STUD - Packing Gland	
	X2821		VALVE & CAGE ASSEM. - AIR STARTING	Includes
1	W-1424	1	CAGE	
2	F-6027	1	VALVE	
3	C-9966	1	BUSHING - Valve	
4	C-2152L2	2	RING - Piston (Valve Bushing Seal)	
5		1	NUT -- 1-14-Hex.	
6	C-9291	1	SPRING - Valve	
7	C-1817	1	CYLINDER - Valve Operating	
8		1	NUT -- 3/4-16-Hex.	
9	C-254	1	PIN - Dowel	
10	X388	1	PISTON ASSEMBLY	
11	584-GX8	1	STOP - Piston	
12	2C2100	1	SNAP-RING - Piston Stop	
13		1	LOCKWASHER -- Shakeproof Type 12 - 1"	

REF. NO.	PART NO.	NO. REQD	DESCRIPTION	
	X2851		HEAD ASSEM. - CYLINDER	Includes
1	X2657	1	HEAD ASSEMBLY	
2	X2660	2	VALVE & CAGE ASSEM.- Inlet	
3	X2661	2	VALVE & CAGE ASSEM. - Exhaust	
4	C-2153L4 1/4	4	RING - Piston (Valve Cage Seal)	
5	C-9601	4	GASKET - Valve Cage to Head	
6	C-8229	6	SPACER - Exhaust Valve Cage Stud	
7		12	NUT -- 3/4-10-Hex.	
8	X2821	1	VALVE & CAGE ASSEM. - Air Starting	
9	C-2153L3	2	RING - Piston (Valve Cage Seal)	
10	C-174	1	GASKET - Valve Cage to Head	
11		2	NUT -- 7/8-9-Hex.	
	X2852		HEAD ASSEM. - CYLINDER	Includes
1	X2659	1	HEAD ASSEMBLY	
2	X2660	2	VALVE & CAGE ASSEM. - Inlet	
3	X2661	2	VALVE & CAGE ASSEM. - Exhaust	
4	C-2153L4 1/4	4	RING - Piston (Valve Cage Seal)	
5	C-9601	4	GASKET - Valve Cage to Head	
6	C-8229	6	SPACER - Exh. Valve Cage Stud	
7		12	NUT -- 3/4-10-Hex.	
8	X2821	1	VALVE & CAGE ASSEM. - Air Starting	
9	C-2153L3	2	RING - Piston (Valve Cage Seal)	
10	C-174	1	GASKET - Valve Cage to Head	
11		2	NUT -- 7/8-9-Hex.	
	X2873		LOCK ASSEM. - ENG. CONTROL HANDLE PAWL	Includes
1	2C1095	1	BEARING	
2	2C1097	1	PLUNGER	
3	2C1094	1	PIN	
4	919-C4	1	SPRING	
5	2C1096	1	KNOB	
	X2874		TUBE ASSEM.-H.P. FUEL(3/8 O.D. x 115 LG.)	Includes
*		1	TUBE	
*		2	SLEEVE	
*		2	NUT	
	X2875		BASE ASSEMBLY	Includes
*		1	BASE	
		2	PIPE PLUG(oil sump)--1" Std.-C't's'k. Hd.	
1	C-8131	8	CONNECTOR - Crank. Brg. Oil Tube	
2	C-2120L11	34	STUD - Crankshaft Bearing Cap	
3	727-HX	24	STUD - Base, Centerframe & Cylinder	
4	S-181	4	STUD - Base & Centerframe (End)	
5	C-5516L3 3/4	28	STUD - Base & Centerframe (Short)	
6	W-955	6	CAP - Crankshaft Bearing	
7	W-957	1	CAP - Crankshaft Bearing (Fly. End)	
8	W-956	1	CAP - Crankshaft Bearing (Short)	
9	C-8139	34	NUT - Crankshaft Bearing Cap	
		34	COTTER PIN -- 3/16 x 2 1/4 Lg.	
	X2876		CENTERFRAME ASSEMBLY	Includes
*		1	CENTERFRAME	
1	C-2010L4 3/4	5	STUD - Fuel Pump Housing	
2	C-5516L4	4	STUD - Air Compressor Cylinder	
	X2877		CYLINDER ASSEMBLY	Includes
*		1	CYLINDER	
1	501-GX8	8	STUD - Cylinder Head	
2	C-1066	8	PIPE - Water By-Pass	
3	605-N	1	COVER - Clean-out	
4	605A-N	1	GASKET - Cover	
5		4	CAPSCREW -- 1/2-13 x 1 1/4 Lg.	
6	C-2010L2 3/4	3	STUD - Platform Bracket	
	X2878		CYLINDER ASSEMBLY	Includes
1	X2879	1	CYLINDER ASSEMBLY	
2	X2655	1	LINER ASSEMBLY	
3	C-9605	1	GASKET - Liner	
4	C-9607	3	GROMMET - Liner	
5	C-3295	2	NIPPLE - Lube Oil	
6	612-R	2	GLAND - Oil Nipple Packing	
7	610A-RB3	4	GROMMET - Oil Nipple	
8	S-2914	2	WASHER - Oil Nipple	
	X2879		CYLINDER ASSEMBLY	Includes
*		1	CYLINDER	
1	C-9608	8	STUD - Cylinder Head	
2	C-1066	8	PIPE - Water By-Pass	
3	605-N	1	COVER - Clean-out	
4	605A-N	1	GASKET - Cover	
5		4	CAPSCREW -- 1/2-13 x 1 1/4 Lg.	
6	C-2010L2 3/4	3	STUD - Platform Bracket	
	X2880		LIFTER ASSEM. - FUEL SPRAY VALVE	Includes
*		1	LIFTER	
1	S-2447	1	PIN - Fuel Wedge	
2	C-3292	1	WASHER - Valve Lifter Spring	
3	S-2255	1	PIN - Lifter Guide	
4	884-E	1	ROLLER	
5	S-3032	1	PIN - Roller	

ASSEM. LIST NO. AL-56
ISSUE 2
ENGINE SIZE 15 x 19

ATLAS IMPERIAL DIESEL ENGINE CO. SUB-ASSEMBLY LIST

WHEN ORDERING PARTS ALWAYS GIVE ENGINE NUMBER-PART NUMBER-NAME-OR COMPLETE DESCRIPTION AND SIZE.
DO NOT ORDER PARTS BY REFERENCE NUMBERS
*INDICATES PARTS NOT SOLD INDIVIDUALLY

REF. No.	PART NUMBER	No. USED	DESCRIPTION	
	X2881		LIFTER ASSEM. - INLET OR EXHAUST VALVE	Includes
*		1	LIFTER	
1	C-9709	1	ROLLER	
2	531-HX	1	PIN	
	X2882		CRANK ASSEM. - HIGH PRESS. FUEL PUMP	Includes
*		1	CRANK	
1		1	PIPE PLUG -- 1/8 Std.	
	X2883		MANIFOLD ASSEM. - CAMSHAFT BEARING OIL	Includes
*		1	PIPE	
*		1	TEE (Inlet)	
*		5	TEE (Outlet)	
1		1	REDUCER -- 1/2 x 1/4 Std.	
	X2884		MANIFOLD ASSEM. - AIR STARTING	Includes
1	F-5365	6	ELBOW	
2		6	NIPPLE -- 2 x 10 Lg.	
3		5	NIPPLE -- 2 x 24 Lg.	
4		6	TEE -- 2 Std.	
6	X2885	1	NIPPLE ASSEMBLY	
	X2885		NIPPLE ASSEM. - AIR STARTING MANIFOLD	Includes
*		1	NIPPLE	
*		1	COUPLING	
	X2890		CLAMP ASSEM. - SPRAY VALVE TEST	Includes
*		1	CLAMP	
*		1	CAP	
1		2	CAPSCREW -- 1/2-13 x 1 3/4 Lg.	
	X3025		ADAPTOR ASSEM. - FUEL TRANSFER PUMP	Includes
*		1	ADAPTOR	
1	2C1450	1	BUSHING - Adaptor	
*		1	BEARING - Pump Shaft	
2	C-9882	2	BUSHING - Pump Shaft Bearing	
3	2C67-P	2	OIL SEAL	
4		3	PIPE PLUG -- 1/8 Std.	
5	C-8176	1	GASKET - Bearing to Adaptor	
6	C-2406L 7/8	3	CAPSCREW - Bearing to Adaptor	
		1	WIRE -- #16 Ga. x 9 Lg.	
	X3057		CYLINDER ASSEM. - REVERSING AIR	Includes
1	X3058	1	CYLINDER ASSEM.	
2		1	PIPE PLUG -- 1/8 Std.	
3	X3059	1	COVER - Front	
4	W-1572	1	COVER - Rear	
5	2C1506	2	GASKET - Cover to Cylinder	
6		12	NUT -- 5/8-11-Hex.	
6		12	LOCKWASHER -- 5/8 SAE Reg.	
7	X3060	2	VALVE ASSEM. - Check	
8	2C1504	2	VALVE - Bleeder	
9		2	PIPE PLUG -- 3/8 Std. C't's'k. Hd.	
10	2C1499	1	ROD - Piston	
11	2C1500	1	PISTON	
12	2C71-P6	1	RING - Piston	
13	F-6944	2	CUP-SEAL - Piston ---- SEE SERVICE NOTE	
14	F-6943	2	FOLLOWER - Cup-Seal	
15	2C1498	2	COLLAR - Piston	
16		1	CASTLE NUT -- 1 1/4-12-Hex.	
16		1	COTTER PIN -- 3/16 x 2 Lg.	
17		5	PACKING RING -- 2 3/4 O.D. x 2 I.D. x 3/8 W. - Garlock #235	
18	2C1505	1	GLAND - Packing	
19		2	NUT -- 5/8-11-Hex.	
19		2	HALF NUT -- 5/8-11-Hex.	

SERVICE NOTE:- When ordering Piston Cup-Seal (Rubber) to replace Cup-Leather always order one 2C3379 Adaptor Ring for each Cup-Seal. This will apply only to Engines below #11942. Ring is used for centering Cup-Seal on Follower.

	X3058		CYLINDER ASSEM. - REVERSING AIR	Includes
*		1	CYLINDER	
1	2C1493	1	LINER	
2	C-5510L2 5/8	12	STUD - Cylinder Head	
	X3059		COVER ASSEM. - REVERS. AIR CYL. (FRONT)	Includes
*		1	COVER	
1	C-8665	2	STUD - Packing Gland	
	X3060		VALVE ASSEM. - REVERS. AIR CYL. CHECK	Includes
*		1	BODY	
1		1	STEEL BALL -- 1/2 Std.	
2	2C1495L 23/32	1	PIN - Ball Retainer	
	X3067		MANIFOLD ASSEM. - AIR INLET	Includes
*		1	MANIFOLD	
*		6	FLANGE - Manifold	
*		1	FLANGE - Air Cleaner Adaptor	

REF. No.	PART NUMBER	No. USED	DESCRIPTION	
	X3087		RAIL ASSEM. - FUEL	Includes
*		1	TUBE - Rail	
1	1205-E1	7	BODY - Isolating Valve	
2	1205C-E	7	SEAT - Isolating Valve	
3	1205D-E	7	PLUG - Isolating Valve	
4	1206-C31	7	STEM - Isolating Valve	
5		21	PACKING -- 1/2 O.D. x 1/4 I.D. x 1/4 Wide Garlock #333	
6	866-E	7	GLAND - Packing	
7	1208-C3	7	NUT - Packing Gland	
8	1200B-FXC4	2	ELBOW - Fuel Rail (End)	
9		2	PIPE PLUG -- 1/4 Std. - C't's'k. Hd.	
	X3088		RAIL ASSEM. - FUEL	Includes
*		1	TUBE - Rail	
1	1205-E1	7	BODY - Isolating Valve	
2	1205C-E	7	SEAT - Isolating Valve	
3	1205D-E	7	PLUG - Isolating Valve	
4	1206-C31	7	STEM - Isolating Valve	
5		21	PACKING -- 1/2 O.D. x 1/4 I.D. x 1/4 Wide Garlock #333	
6	866-E	7	GLAND - Packing	
7	1208-C3	7	NUT - Packing Gland	
8	1200B-FXC4	2	ELBOW - Fuel Rail (End)	
9		2	PIPE PLUG -- 1/4 Std. - C't's'k. Hd.	
	X3106		VALVE ASSEM. - BALL CHECK	Includes
*		1	BODY	
*		1	STEEL BALL -- 3/8 Std.	
*		1	PIN - Ball Retainer	
	X3126		LEVER ASSEM. - OVER. GOV. LATCH TRIP	Includes
*		1	LEVER	
1	2C1359	1	ROLLER	
2	C-3190	1	PIN	
	X3218		BODY ASSEM. - H.P. FUEL PUMP	Includes
*		1	BODY	
*		1	PLUNGER	
	X3219		YOKE ASSEM. - INLET VALVE	Includes
*		1	YOKE	
*		1	STEM	
	X3220		YOKE ASSEM. - EXHAUST VALVE	Includes
*		1	YOKE	
*		1	STEM	
	X3221		BODY ASSEM. - CYL. RELIEF VALVE	Includes
*		1	BODY	
*		1	GUARD	
	X3222		VALVE ASSEM. - CYL. RELIEF	Includes
1	X3221	1	BODY ASSEMBLY	
2	2C2087	1	VALVE	
3	2C2094	1	SPRING	
4	S-1833	1	WASHER - Spring Retainer	
5		1	CASTLE NUT -- 3/8-24-NF-Hex.	
		1	COTTER PIN -- 3/32 x 3/4 Lg.	
6	2C2086	1	PISTON - Valve Control	
7	2C2085	1	CAP - Relief Valve	
8	2C2095	1	GASKET - Cap to Body	
	X3223		NIPPLE ASSEM. - AIR START. MANIFOLD	Includes
*		1	NIPPLE	
*		1	COUPLING	
*		1	HALF COUPLING -- 3/8 Std.	
	X3224		MANIFOLD ASSEM.-CYL. RELIEF VALVE AIR	Includes
*		1	MANIFOLD	
*		6	HALF COUPLING -- 1/8 Std.	
	X3227		PUMP ASSEM. - FUEL PRIMING	Includes
*		1	BODY	
*		1	PLUNGER	
1		1	PACKING -- 1/8 Rd. x 7 Lg. - (Pelro)	
2	S-2065	1	WASHER - Packing	
3	S-2064	1	NUT	
		1	NUT -- 7/16-20-NF-Hex.	
	X3234		ACCUMULATOR ASSEM. - FUEL	Includes
*		1	BODY	
*		1	PLUG (Lower)	
*		1	PLUG (Upper)	
*		1	FLANGE - Adaptor	

ATLAS IMPERIAL DIESEL ENGINE CO.

SUB-ASSEMBLY LIST

ALWAYS GIVE - ENGINE NO. - PART NAME - PART NUMBER OR COMPLETE DESCRIPTION AND SIZE
DO NOT ORDER PARTS BY REFERENCE NUMBERS
* INDICATES PARTS NOT SOLD INDIVIDUALLY

ENG. AL 57
ISSUE NO. 3
SIZE 15 X 19

REF. NO.	PART NUMBER	NO. REQD	DESCRIPTION
	X3239		HEAD ASSEM. - CYLINDER — Includes
*		1	HEAD - Cylinder
		7	PIPE PLUG -- 1 Std.
1		1	PIPE PLUG -- 3/8 Std. - C't's'k. Hd.
2	C-1837	6	STUD - Inlet Valve Cage
3	C-8228	6	STUD - Exhaust Valve Cage
4	C-2014L4	2	STUD - Air Starting Valve Cage
5	S-60	4	STUD - Rocker Shaft Bearing
6	C-2010L5 3/8	1	STUD - Spray Valve Rocker Stand
7	854A-JX	1	STUD - Spray Valve Clamp
9	C-3147	2	NOZZLE - Spray Valve Cooling
10	621A-F	3	PIN - Dowel (Valve Yoke Stand & S. Valve)
11	C-8214	2	COVER - Clean-out (Blind)
12	C-8216	1	COVER - Clean-out (Tapped)
13	C-8215	3	GASKET - Cover to Head
14		12	CAPSCREW -- 1/2-13-NC x 1 Lg.
15	F-6432	2	STUD - Valve Yoke Guide
	SERVICE NOTE:- Always Include 4 - 3/4-10 x 1 3/4 Lg. Capscrews for Exh. Elbow.		
	X3240		HEAD ASSEM. - CYLINDER — Includes
1	X3239	1	HEAD ASSEM.
2	X2660	2	VALVE & CAGE ASSEM. - Inlet
3	X2661	2	VALVE & CAGE ASSEM. - Exhaust
4	C-2153L4 1/4	4	RING - Piston (Valve Cage Seal)
5	C-9601	4	GASKET - Valve Cage to Head
6	C-8229	6	SPACER - Exhaust Valve Cage Stud
7		12	NUT -- 3/4-10-NC-Hex.
8	X2821	1	VALVE & CAGE ASSEM. - Air Starting
9	C-2153L3	2	RING - Piston (Valve Cage Seal)
10	C-174	1	GASKET - Valve Cage to Head
11		2	NUT -- 7/8-9-NC-Hex.
	X3241		HEAD ASSEM. - CYLINDER — Includes
*		1	HEAD - Cylinder
		7	PIPE PLUG -- 1 Std.
1		1	PIPE PLUG -- 3/8 Std. - C't's'k. Hd.
2	C-1837	6	STUD - Inlet Valve Cage
3	C-8228	6	STUD - Exhaust Valve Cage
4	C-2014L4	2	STUD - Air Starting Valve Cage
5	S-60	4	STUD - Rocker Shaft Bearing
6	C-2010L5 3/8	1	STUD - Spray Valve Rocker Stand
7	854A-JX	1	STUD - Spray Valve Clamp
9	C-3147	2	NOZZLE - Spray Valve Cooling
10	621A-F	3	PIN - Dowel (Valve Yoke Stand & S. Valve)
11	C-8214	2	COVER - Clean-out (Blind)
12	C-8216	1	COVER - Clean-out (Tapped)
13	C-8215	3	GASKET - Cover to Head
14		12	CAPSCREW -- 1/2-13-NC x 1 Lg.
15	F-6432	2	STUD - Valve Yoke Guide
	SERVICE NOTE:- Always include 4 - 3/4-10 x 1 3/4 Lg. Capscrews for Exh. Elbow.		
	X3242		HEAD ASSEM. - CYLINDER — Includes
1	X3241	1	HEAD ASSEMBLY
2	X2660	2	VALVE & CAGE ASSEM. - Inlet
3	X2661	2	VALVE & CAGE ASSEM. - Exhaust
4	C-2153L4 1/4	4	RING - Piston (Valve Cage Seal)
5	C-9601	4	GASKET - Valve Cage to Head
6	C-8229	6	SPACER - Exh. Valve Cage Stud
7		12	NUT -- 3/4-10-Hex.
8	X2821	1	VALVE & CAGE ASSEM. - Air Starting
9	C-2153L3	2	RING - Piston (Valve Cage Seal)
10	C-174	1	GASKET - Valve Cage to Head
11		2	NUT -- 7/8-9-Hex.
	X3243		CYLINDER ASSEM. - AIR COMPRESSOR — Includes
*		1	CYLINDER
1		5	PIPE PLUG -- 1 Std. - C't's'k. Hd.
2		1	REDUCING BUSH.(Air Compart.)-3/4 x 1/2 Std.
3		2	PIPE PLUG -- 1/2 Std. - C't's'k. Hd.-(Brass)
4	C-5512L6 1/4	10	STUD - Cyl. Head
5	C-5512L7 1/2	4	STUD - Valve Chamber
	X3244		HEAD ASSEM. - AIR COMP. CYLINDER — Includes
*		1	HEAD
1		3	PIPE PLUG -- 1 Std. - C't's'k. Hd.
2	C-5510L2 1/2	3	STUD - Suction Valve Unloader Adaptor
3	C-5510L2 3/4	4	STUD - Discharge Valve Retainer Flange
4	C-9246	2	GUIDE - Suction Valve
	X3245		HEAD ASSEM. - AIR COMP. CYLINDER — Includes
1	X3244	1	HEAD ASSEMBLY
2	2C1871	2	VALVE - Suction
3	2C1875	2	SPRING - Suction Valve
4	C-9262	2	NUT - Suction Valve Spring Retainer
4		2	COTTER PIN -- 1/8 x 1 Lg.
5	2C1868	2	GUIDE - Discharge Valve
6	2C1872	2	GASKET - Discharge Valve Guide
7	2C1869	2	VALVE - Discharge
8	C-9265	2	WASHER - Discharge Valve Spring Retainer
9		2	CASTLE NUT -- 3/8-24-Hex.
9		2	COTTER PIN -- 1/16 x 3/4 Lg.
10	2C1437	2	SPRING - Discharge Valve
11	C-9263	2	RETAINER - Discharge Valve Spring & Guide
12	C-9266	1	GASKET - Retainer to Valve Guide
13	2C1870	1	FLANGE - Discharge Valve Guide Retainer
14		4	NUT -- 5/8-11-Hex.
15	2C2595L2 1/4	2	SCREW - Valve Guide Retainer
15		2	HALF NUT -- 3/4-10-Hex.

REF. NO.	PART NUMBER	NO. REQD	DESCRIPTION
	X3246		PIN ASSEM. - PISTON — Includes
*		1	PIN
1	S-3120	1	PIN - Dowel
	X3247		STRAP ASSEM.-AIR COMPRESSOR ECCENTRIC — Includes
*		1	STRAP (Lower Half)
*		1	STRAP (Upper Half)
1	C-9242-B	4	SHIM (1/32)
1	C-9242-D	10	SHIM (.010)
1	C-9242-E	8	SHIM (.003)
2	C-2616L14 1/4	2	BOLT
2	C-1773	2	NUT
2		2	COTTER PIN -- 1/8 x 1 3/4 Lg.
3	C-2116L4	2	STUD - Connect. Rod
	X3248		ROD ASSEM.-AIR COMPRESSOR CONNECTING — Includes
*		1	ROD
1	2C1878	1	BUSHING - Piston Pin
2		1	PIPE PLUG -- 3/8 Std. - C't's'k. Hd.
	X3249		ECCENTRIC ASSEM.-AIR COMP. & WATER PUMP — Includes
*		1	ECCENTRIC (Lower)
*		1	ECCENTRIC (Upper)
1	C-8158	2	PIN - Dowel (Lower to Upper Half)
2	C-2112L5 1/2	2	STUD - (Lower to Upper Half)
3	S-2713	2	NUT
3		2	COTTER PIN -- 1/8 x 1 1/2 Lg.
4	C-2112L5 1/4	2	STUD (Lower to Upper Half)
5		2	CASTLE NUT -- 3/4-16-Hex.
5		2	COTTER PIN -- 1/8 x 1 1/4 Lg.
	X3250		BODY ASSEM. - GOVERNOR — Includes
1	X2576	1	BODY ASSEMBLY
2	C-548	1	PIN - Quill Guide
3	X2650	1	QUILL ASSEM. - Thrust
4	X2578	2	WEIGHT ASSEMBLY
5	2C1821	2	PIN - Weight to Body
6		4	CASTLE NUT -- 1/2-20-NF-Hex.
6		4	COTTER PIN -- 3/32 x 1 Lg.
7	C-9498-P	1	BALL BEARING
	X3251		HEAD ASSEM. - H.P. FUEL PUMP — Includes
*		1	HEAD
1	2C1833L 1/8	1	PIPE PLUG
	X3252		ROD & BEARING ASSEM. - CONNECTING — Includes
1	X3253	1	ROD ASSEM. - Connecting
2	X3106	1	VALVE ASSEM. - Ball Check
3	W-1714	2	SHELL - Bearing
4	2C1982-B	4	SHIM - Bearing (1/32)
4	2C1982-D	10	SHIM - Bearing (.010)
4	2C1982-E	8	SHIM - Bearing (.003)
5	X3254	1	BEARING ASSEM. - Connect. Rod
6	2C1980-A	1	SHIM - Bearing to Rod (1/16)
6	2C1980-B	1	SHIM - Bearing to Rod (1/32)
6	2C1980-C	2	SHIM - Bearing to Rod (1/64)
7	2C1978	2	BOLT - Connect. Rod to Bearing
8	C-9593	2	NUT - Connect. Rod Bolt
		2	COTTER PIN -- 5/16 x 3 1/4 Lg.
	X3253		ROD ASSEM. - CONNECTING — Includes
*		1	ROD
1	F-5877	1	BUSHING
		1	PIPE PLUG -- 1/2 Std.
	X3254		BEARING ASSEM. - CONNECTING ROD — Includes
*		1	BEARING (Upper Half)
*		1	BEARING (Lower Half)
1	C-2508L2 1/2	2	CAPSCREW
		2	CASTLE NUT -- 1/2-20-Hex.
		2	COTTER PIN -- 3/32 x 1 Lg.
	X3261		HANDLE ASSEM. - ENGINE CONTROL — Includes
*		1	HANDLE
1	2C2166	1	PAWL
2	C-9406	1	ROD - Pawl
3		1	COTTER PIN -- 1/8 x 3/4 Lg.
4	572-GX8	1	SPRING - Pawl
5	C-9405	1	CAM - Pawl
6	C-7972L1 1/8	1	PIN - Cam to Control Handle
7	C-9543	1	PLUNGER - Cam Control
8	C-9544	1	GUIDE - Plunger
9	X2873	1	LOCK ASSEM. - Pawl
10		1	CAPSCREW -- 5/16-18 x 1 1/2 Lg.-Flat Hd.

ATLAS IMPERIAL
DIESEL ENGINE CO.

SUB-ASSEMBLY LIST

ALWAYS GIVE - ENGINE NO. - PART NAME - PART NUMBER OR COMPLETE DESCRIPTION AND SIZE
DO NOT ORDER PARTS BY REFERENCE NUMBERS
* INDICATES PARTS NOT SOLD INDIVIDUALLY

NEG. No. 4L58
ISSUE No. 2
ENG. SIZE 14½x18 15x19

REF. No.	PART NUMBER	NO. REQD	DESCRIPTION	
	X3293		ROD & BEARING ASSEM. - CONNECTING	Includes
1	X3253	1	ROD ASSEM. - Connecting	
2	X3106	1	VALVE ASSEM. - Ball Check	
3	W-1714	2	SHELL - Bearing	
4	2C2344-B	4	SHIM - Bearing (1/32)	
4	2C2344-D	10	SHIM - Bearing (.010)	
4	2C2344-E	8	SHIM - Bearing (.003)	
5	X3294	1	BEARING ASSEM. - Connecting Rod	
6	2C1980-A	1	SHIM - Bearing to Rod (1/16)	
6	2C1980-B	1	SHIM - Bearing to Rod (1/32)	
6	2C1980-C	2	SHIM - Bearing to Rod (1/64)	
7	2C1978	2	BOLT - Rod to Bearing	
8	C-9593	2	NUT - Connect. Rod Bolt	
		2	COTTER PIN -- 5/16 x 3 1/4 Lg.	
	X3294		BEARING ASSEM. - CONNECTING ROD	Includes
*		1	BEARING (Upper Half)	
*		1	BEARING (Lower Half)	
1	C-2508L2 1/2	2	CAPSCREW	
		2	CASTLE NUT -- 1/2-20-Hex.	
		2	COTTER PIN -- 3/32 x 1 Lg.	
	X3300		BEARING ASSEM. - CONNECTING ROD	Includes
*		1	BEARING (Upper Half)	
*		1	BEARING (Lower Half)	
1	2C2351-B	4	SHIM (1/32)	
1	2C2351-D	10	SHIM (.010)	
1	2C2351-E	8	SHIM (.003)	
2	C-2508L2 1/2	2	CAPSCREW - Conn. Rod Brg.	
3		2	CASTLE NUT -- 1/2-20-Hex.	
		2	COTTER PIN -- 3/32 x 1 Lg.	
	X3349		ECCENTRIC ASSEM. - AIR COMPRESSOR	Includes
*		1	ECCENTRIC (Lower Half)	
*		1	ECCENTRIC (Upper Half)	
1	C-2112L5 1/2	4	STUD	
2	S-2713	4	NUT	
		4	COTTER PIN -- 1/8 x 1 1/2 Lg.	
3	C-8158	2	PIN - Dowel	
	X3350		SPROCKET ASSEM. - WATER PUMP DRIVE	Includes
*		2	SPROCKET (Halves)	
1	C-2508L1 7/8	2	BOLT - Sprocket	
		2	CASTLE NUT -- 1/2-20-NF-Hex.	
		2	COTTER PIN -- 3/32 x 1 Lg.	
2	S-3032	2	PIN - Dowel	
	X3351		CAGE ASSEM. - DRIVE SHAFT BEARING	Includes
*		1	CAGE - Bearing	
1		1	OIL SEAL -- National Motor Brg. #50320	
	X3352		CAGE ASSEM. - DRIVE SHAFT BEARING	Includes
*		1	CAGE - Bearing	
1		1	OIL SEAL -- National Motor Brg. #50320	
	X3353		BEARING ASSEM. - CHAIN IDLER SHAFT	Includes
*		1	BEARING	
1		1	OIL SEAL -- National Motor Brg. #50453	
	X3354		BEARING ASSEM. - CHAIN IDLER SHAFT	Includes
*		1	BEARING	
1	2C2608	1	PLUG - Bearing End	
	X3355		CYLINDER ASSEMBLY	Includes
1	X3356	1	CYLINDER ASSEM.	
2	X2655	1	LINER ASSEM.	
3	C-9605	1	GASKET - Liner to Cylinder	
4	C-9607	3	GROMMET - Liner	
5	C-3295	2	NIPPLE - Lube Oil	
6	612-R	2	GLAND - Packing	
7	610A-RB3	4	GROMMET - Lube Oil Nipple	
8	S-2914	2	WASHER - Lube Oil Nipple	
	X3356		CYLINDER ASSEMBLY	Includes
*		1	CYLINDER	
1	C-9608	8	STUD - Cylinder Head	
2	2C2605	8	PIPE - Water By-Pass	
3	605-N	1	COVER - Clean-out	
4	605A-N	1	GASKET - Cover	
5		4	CAPSCREW -- 1/2-13 x 1 1/4 Lg.	
		4	LOCKWASHER -- 1/2 SAE Reg.	
	X3357		MANIFOLD ASSEM. - AIR STARTING	Includes
1	F-5365	6	ELBOW	
2		6	NIPPLE -- 2 x 10 Lg.	
3		5	NIPPLE -- 2 x 24 Lg.	
4		6	TEE -- 2 Std.	

REF. No.	PART NUMBER	NO. REQD	DESCRIPTION	
	X3358		VALVE ASSEM. - AIR START. MANIFOLD AIR	-Includes
1	X3359	1	BODY ASSEM.	
2	F-5683	1	VALVE	
3	C-9411-P3 ½	2	RING - Piston	
4	C-9098	1	SPRING	
6	F-6249	1	COVER	
7	2C1540	1	GASKET - Cover	
		4	NUT -- 3/4-10-NC-Hex.	
9	C-9099	1	COVER - Vent	
		2	CAPSCREW -- 1/4-20-NC x 3/4 Lg.	
		2	LOCKWASHER -- 1/4 SAE Reg.	
	X3359		BODY ASSEM.-AIR START. MANIFOLD AIR VALVE-	Includes
*		1	BODY	
1	C-5512L2 3/4	4	STUD - Cover	
2	C-9536	1	BUSHING - Valve Stem	
3	C-9537	1	BUSHING - Valve	
		1	PIPE PLUG -- 1/8 Std.	
	X3360		ADAPTOR ASSEM. - FUEL TRANSFER PUMP	Includes
*		1	ADAPTOR	
1	2C2477	1	BUSHING	
*		1	BEARING - Pump Shaft	
2	C-9882	1	BUSHING - Bearing (Gear End)	
3	2C2477	1	BUSHING - Bearing (Seal End)	
		3	PIPE PLUG -- 1/8 Std.	
4	C-8176	1	GASKET - Bearing to Adaptor	
5	C-2406L 7/8	3	CAPSCREW - Bearing to Adaptor	
		1	WIRE -- #16 Ga. x 9 Lg.	
	X3367		VALVE ASSEM. - INLET OR EXHAUST	Includes
*		1	HEAD	
*		1	STEM	
	X3380		MANIFOLD ASSEM. - AIR INLET	Includes
*		1	MANIFOLD	
*		6	FLANGE	
*		1	FLANGE - Adaptor	
	X3381		HEAD ASSEM. - AIR COMPRESSOR CYLINDER	Includes
*		1	HEAD	
*		3	PIPE PLUG -- 1 Std.	
1	C-5510L3	3	STUD - Suct. Valve Retain. Flange	
2	C-5510L2 3/4	4	STUD - Disch. Valve Retain. Flange	
	X3382		HEAD ASSEM. - AIR COMPRESSOR CYLINDER	Includes
1	X3381	1	HEAD ASSEM.	
2	2C2646	2	SEAT - Suction Valve	
3	2C1872	2	GASKET - Seat to Head	
4	2C2647	2	RETAINER - Suct. Valve Seat	
5	F-6658	1	FLANGE - Suct. Valve Seat Retainer	
		3	NUT -- 5/8-11-NC-Hex.	
6	S-1391	2	VALVE - Suction	
7	S-1390	2	SPRING - Suction Valve	
8	S-1389	2	RETAINER - Suct. Valve	
9	C-2506L1 1/4	2	CAPSCREW - Suct. Valve Retain.	
		2	CASTLE NUT -- 3/8-24-NF-Hex.	
		2	COTTER PIN -- 3/32 x 3/4 Lg.	
10	F-5747	2	GUIDE - Discharge	
11	C-9267	2	GASKET - Discharge Valve Guide	
12	C-9257	2	VALVE - Discharge	
13	C-9265	2	WASHER - Discharge Valve Spring Retainer	
		2	CASTLE NUT -- 3/8-24-NF-Hex.	
		2	COTTER PIN -- 1/16 x 3/4 Lg.	
14	2C1437	2	SPRING - Discharge Valve	
15	C-9263	2	RETAINER - Discharge Valve Spring & Guide	
16	C-9266	1	GASKET - Retainer to Valve Guide	
17	2C2644	1	FLANGE - Discharge Valve Guide Retainer	
		4	NUT -- 5/8-11-NC-Hex.	
18	2C2595L2 1/4	2	SCREW - Valve Guide Retainer	
		2	HALF NUT -- 3/4-10-NC-Hex.	
	X3383		HEAD ASSEM. - AIR COMPRESSOR CYLINDER	Includes
*		1	HEAD - Cylinder	
*		3	PIPE PLUG -- 1 Std.	
1	C-5510L3	3	STUD - Suction Valve Retain. Flange	
2	C-5510L2 3/4	4	STUD - Disch. Valve Retain. Flange	

NEG. No. AL 59
ISSUE No. 2
ENG. SIZE 15 x 19

ATLAS IMPERIAL DIESEL ENGINE CO.

SUB-ASSEMBLY LIST

ALWAYS GIVE - ENGINE NO. - PART NAME - PART NUMBER OR COMPLETE DESCRIPTION AND SIZE
DO NOT ORDER PARTS BY REFERENCE NUMBERS
* INDICATES PARTS NOT SOLD INDIVIDUALLY

REF. No.	PART NUMBER	NO. REQ'D	DESCRIPTION	
	X3384		HEAD ASSEM. - AIR COMPRESSOR CYLINDER	Includes
1	X3383	1	HEAD ASSEM.	
2	2C2646	2	SEAT - Suct. Valve	
3	2C1872	2	GASKET - Seat to Head	
4	2C2647	2	RETAINER - Suct. Valve Seat	
5	F-6658	1	FLANGE - Suct. Valve Seat Retainer	
		3	NUT -- 5/8-11-NC-Hex.	
6	S-1391	2	VALVE - Suction	
7	S-1390	2	SPRING - Suction Valve	
8	S-1389	2	RETAINER - Suction Valve	
9	C-2506L1 1/4	2	CAPSCREW - Suction Valve Retainer	
		2	CASTLE NUT -- 3/8-24-NF-Hex.	
		2	COTTER PIN -- 3/32 x 3/4 Lg.	
10	2C1868	2	GUIDE - Discharge Valve	
11	2C1872	2	GASKET - Discharge Valve Guide	
12	2C1869	2	VALVE - Discharge	
13	C-9265	2	WASHER - Disch. Valve Spring Retain.	
		2	CASTLE NUT -- 3/8-24-NF-Hex.	
		2	COTTER PIN -- 1/16 x 3/4 Lg.	
14	2C1437	2	SPRING - Discharge Valve	
15	C-9263	2	RETAINER - Disch. Valve Spring & Guide	
16	C-9266	1	GASKET - Retainer to Valve Guide	
17	2C1870	1	FLANGE - Disch. Valve Guide Retain.	
		4	NUT -- 5/8-11-NC-Hex.	
18	2C2595L2 1/4	2	SCREW - Valve Guide Retainer	
		2	HALF NUT -- 3/4-10-NC-Hex.	
	X3385		MANIFOLD ASSEM. - AIR INLET	Includes
*		1	MANIFOLD	
*		6	FLANGE	
	X3458		MANIFOLD ASSEM. - VALVE LIFTER OIL	Includes
*		1	PIPE	
*		6	HALF COUPLING - 1/8 Std.	
	X3459		LEVER ASSEM. - WEDGE THRO-OUT	Includes
*		1	LEVER	
1	S-2301	1	PIN	
	X3460		LEVER ASSEM. - WEDGE THRO-OUT	Includes
*		1	LEVER	
1	S-2301	1	PIN	
	X3461		BASE ASSEMBLY	Includes
*		1	BASE	
1		2	PIPE PLUG(Oil Sump)--1" Std.-Ctsk. Hd.	
2		1	PIPE PLUG -- 1 1/2 Std. - Ctsk. Hd.	
3	C-8131	9	CONNECTOR - Crank. Brg. Oil Tube	
4	C-2120L11	36	STUD - Crankshaft Bearing Cap	
5	727-HX	24	STUD - Base, Centerframe & Cylinder	
6	S-181	4	STUD - Base & Centerframe (End)	
7	C-5516L3 3/4	28	STUD - Base & Centerframe (Short)	
8	C-2024L5 3/4	6	STUD - Base Extension	
9	W-955	8	CAP - Crankshaft Bearing	
10	W-956	1	CAP - Crankshaft Bearing (Short)	
11	C-8139	36	NUT - Crankshaft Bearing Cap	
11		36	COTTER PIN -- 3/16 x 2 1/4 Lg.	
	X3498		HANDLE ASSEM. - ENGINE CONTROL	Includes
*		1	HANDLE	
1	C-9545	1	PAWL	
2	C-9406	1	ROD - Pawl	
3		1	COTTER PIN -- 1/8 x 3/4 Lg.	
4	572-GX8	1	SPRING - Pawl	
5	C-9405	1	CAM - Pawl	
6	C-7972L1 1/8	1	PIN - Cam to Control Handle	
7	2C2868	1	PLUNGER - Cam Control	
8	C-9544	1	GUIDE - Plunger	
9	X3499	1	LOCK ASSEM. - Pawl	
10		1	CAPSCREW -- 5/16-18-NC x 1/2 Lg.-Flat Hd.	
	X3499		LOCK ASSEM. - ENG. CONTROL HANDLE PAWL	Includes
1	2C1095	1	BEARING	
2	2C2871	1	PLUNGER	
3	2C1094	1	PIN	
4	919-C4	1	SPRING	
5	2C2870	1	KNOB	
	X3518		MANIFOLD ASSEM. - AIR INLET	Includes
			Manifold & Flanges (No Service Parts)	
	X3519		MANIFOLD ASSEM. - EXHAUST	Includes
*		1	MANIFOLD	
1	C-2014L3 1/2	4	STUD - Manifold End	
		4	PIPE PLUG -- 1 1/2 Std.	
	X3520		SPROCKET ASSEM. - WATER PUMP DRIVE	Includes
*		2	SPROCKET (Halves)	
1	C-2508L1 7/8	2	BOLT - Sprocket	
		2	CASTLE NUT -- 1/2-20-NF-Hex.	
		2	COTTER PIN -- 3/32 x 1 Lg.	
2	S-3032	2	PIN - Dowel	
	X3521		PIPE ASSEM. - WATER BY-PASS	Includes
*		1	PIPE - By-Pass	
1	2C2754	1	STUD - Valve Quadrant Clamp	
	X3522		COVER ASSEM. - WATER BY-PASS PIPE	Includes
*		1	COVER - By-Pass Pipe	
1	2C2798L2	2	STUD - Packing Gland	
	X3523		PIPE & VALVE ASSEM. - WATER BY-PASS	Includes
1	X3521	1	PIPE ASSEM. - By-Pass	
2	2C3010	1	SHAFT - Butterfly Valve	
3	2C3011	1	VALVE - Butterfly	
4		1	TAPER PIN -- #2 x 1 1/4 Lg.	
5	X3522	1	COVER ASSEM. - By-Pass Pipe	
6	2C3013	1	GASKET - Cover to Pipe	
		4	CAPSCREW -- 3/8-16-NC x 1 1/4 Lg.	
		4	LOCKWASHER -- 3/8 SAE Reg.	
		4	PACKING -- 3/16 Sq. x 2 3/4 Lg.-(Flax)	
7	2C2756	1	GLAND - Packing	
		4	HALF NUT -- 3/8-16-NC-Hex.	
8	F-6714	1	QUADRANT - Butterfly Valve Control	
9		1	WOODRUFF KEY -- 1/8 x 3/4 Std.	
		1	CAPSCREW(Clamp)--3/8-16-NC x 1 1/4 Lg.	
		1	NUT (Quad.) -- 5/8-11-NC-Hex.	
		1	PLAIN WASHER -- 5/8 SAE Std.	
	X3524		PIPE ASSEM. - WATER BY-PASS	Includes
*		1	PIPE - By-Pass	
1	2C2754	1	STUD - Valve Quadrant Clamp	
	X3525		PIPE & VALVE ASSEM. - WATER BY-PASS	Includes
1	X3524	1	PIPE ASSEM. - By-Pass	
2	2C3010	1	SHAFT - Butterfly Valve	
3	2C3011	1	VALVE - Butterfly	
4		1	TAPER PIN -- #2 x 1 1/4 Lg.	
5	X3522	1	COVER ASSEM. - By-Pass Pipe	
6	2C3013	1	GASKET - Cover to Pipe	
		4	CAPSCREW -- 3/8-16-NC x 1 1/4 Lg.	
		4	LOCKWASHER -- 3/8 SAE Reg.	
		4	PACKING -- 3/16 Sq. x 2 3/4 Lg.-(Flax)	
7	2C2756	1	GLAND - Packing	
		4	HALF NUT -- 3/8-16-NC-Hex.	
8	F-6714	1	QUADRANT - Butterfly Valve Control	
9		1	WOODRUFF KEY -- 1/8 x 3/4 Std.	
		1	CAPSCREW(Clamp)--3/8-16-NC x 1 1/4 Lg.	
		1	NUT (Quad.) -- 5/8-11-NC-Hex.	
		1	PLAIN WASHER -- 5/8 SAE Std.	
	X3582		VALVE ASSEM. - OVERSPEED GOV. BY-PASS	Includes
			Body & Plunger (No Service Parts)	
	X3583		HOUSING ASSEM. - FUEL BY-PASS VALVE	Includes
*		1	HOUSING	
1	C-3190	1	PIN	
	X3584		WEIGHT ASSEM. - GOVERNOR	Includes
*		1	WEIGHT - Governor	
1	C-544	1	ROLLER	
2	C-7972L1 1/16	1	PIN - Roller	
	X3585		WEIGHT ASSEM. - GOVERNOR	Includes
*		1	WEIGHT - Governor	
1	C-544	1	ROLLER	
2	C-7972L1 1/16	1	PIN - Roller	
	X3586		VALVE ASSEM. - ISOLATING	Includes
*		1	BODY - Valve	
1	1206-C31	1	STEM - Valve	
2		3	PACKING -- 1/2 O.D. x 1/4 I.D. x 1/4 Wide - Garlock #333	
3	866-E	1	GLAND - Packing	
4	1208-C3	1	NUT - Packing Gland	
	X3612		PLUG ASSEM. - WATER BY-PASS VALVE FUSE	Includes
			Plug & Fusible Metal (No Service Parts)	

ASSEM. LIST NO. AL 60
ISSUE 2
ENGINE SIZE 15' 19

ATLAS IMPERIAL DIESEL ENGINE CO. SUB-ASSEMBLY LIST

WHEN ORDERING PARTS ALWAYS GIVE ENGINE NUMBER - PART NUMBER - NAME - OR COMPLETE DESCRIPTION AND SIZE.
DO NOT ORDER PARTS BY REFERENCE NUMBERS
*INDICATES PARTS NOT SOLD INDIVIDUALLY

REF. No.	PART NUMBER	No. USED	DESCRIPTION
	X3614		VALVE ASSEM. - HIGH TEMP. WATER BY-PASS Includes
1	W-2121	1	HOUSING - Valve
		2	PIPE PLUG -- 1/4 Std.
		2	PIPE PLUG -- 1 Std.
2	2C3283	1	COVER - Valve Housing
3	2C3289	1	GASKET - Cover to Housing
		2	CAPSCREW -- 1/2-13-NC x 1 1/2 Lg.
		2	LOCKWASHER -- 1/2 SAE Reg.
		1	PIPE PLUG -- 1/2 Std.
		1	PIPE PLUG -- 3/4 Std.
4	2C3285	1	VALVE - By-Pass
5	2C3288	1	SHAFT - Valve
6	X3612	1	PLUG ASSEM. - By-Pass Valve Fuse
7	2C3287	1	CAP - Fuse Plug
8	1247-E	1	GASKET - Cap to Valve Housing
9	X3616	1	NIPPLE ASSEM. - Water By-Pass
10	2C3292	1	PLUNGER - By-Pass Valve
		1	COTTER PIN -- 1/8 x 3/4 Lg.
11	2C3291	1	SPRING - Plunger
	X3615		VALVE ASSEM. - HIGH TEMP. WATER BY-PASS Includes
1	W-2142	1	HOUSING - Valve
		2	PIPE PLUG -- 1/4 Std.
		2	PIPE PLUG -- 1 Std.
2	2C3283	1	COVER - Valve Housing
3	2C3289	1	GASKET - Cover to Housing
		2	CAPSCREW -- 1/2-13-NC x 1 1/2 Lg.
		2	LOCKWASHER -- 1/2 SAE Reg.
		1	PIPE PLUG -- 1/2 Std.
		1	PIPE PLUG -- 3/4 Std.
4	2C3404	1	VALVE - By-Pass
5	2C3288	1	SHAFT - Valve
6	X3633	1	PLUG ASSEM. - By-Pass Valve Fuse
7	2C3405	1	CAP - Fuse Plug
8	2C3406	1	GASKET - Cap to Valve Housing
9	X3616	1	NIPPLE ASSEM. - Water By-Pass
10	2C3292	1	PLUNGER - By-Pass Valve
		1	COTTER PIN -- 1/8 x 3/4 Lg.
11	2C3291	1	SPRING - Plunger
	X3616		NIPPLE ASSEM. - WATER BY-PASS Includes
			Nipple & Plunger Boss (No Service Parts)
	X3632		VALVE ASSEM. - HIGH TEMP. WATER BY-PASS Includes
1	W-2190	1	HOUSING - Valve
		2	PIPE PLUG -- 1/4 Std.
		2	PIPE PLUG -- 1 Std.
2	2C3283	1	COVER - Valve Housing
3	2C3289	1	GASKET - Cover to Housing
		2	CAPSCREW -- 1/2-13-NC x 1 1/2 Lg.
		2	LOCKWASHER -- 1/2 SAE Reg.
		1	PIPE PLUG -- 1/2 Std.
		1	PIPE PLUG -- 3/4 Std.
4	2C3404	1	VALVE - By-Pass
5	2C3288	1	SHAFT - Valve
6	X3633	1	PLUG ASSEM. - By-Pass Valve Fuse
7	2C3405	1	CAP - Fuse Plug
8	2C3406	1	GASKET - Cap to Valve Housing
9	X3616	1	NIPPLE ASSEM. - Water By-Pass
10	2C3292	1	PLUNGER - By-Pass Valve
		1	COTTER PIN -- 1/8 x 3/4 Lg.
11	2C3291	1	SPRING - Plunger
	X3633		PLUG ASSEM. - WATER BY-PASS VALVE FUSE Includes
			Fuse Plug & Fusible Metal (No Service Parts)

REF. No.	PART NUMBER	No. USED	DESCRIPTION

REF. NO.	NO. REQ.	PART
1	1	HOUSING LOWER HALF
2	1	HOUSING UPPER HALF
3	4	SHOE ASSEMBLY
4	6	THRUST PIN
5	4	JACK SCREW
6	4	LOCK WRENCH
7	2	PACKING GLAND ASSEM.
8	1	OIL SCRAPER
9	1	AIR VENT
10	1	TOP COVER PLATE
10A	1	GASKET
11	1	OIL GAUGE

BEARING COMPLETE PART NO. 2C140-P

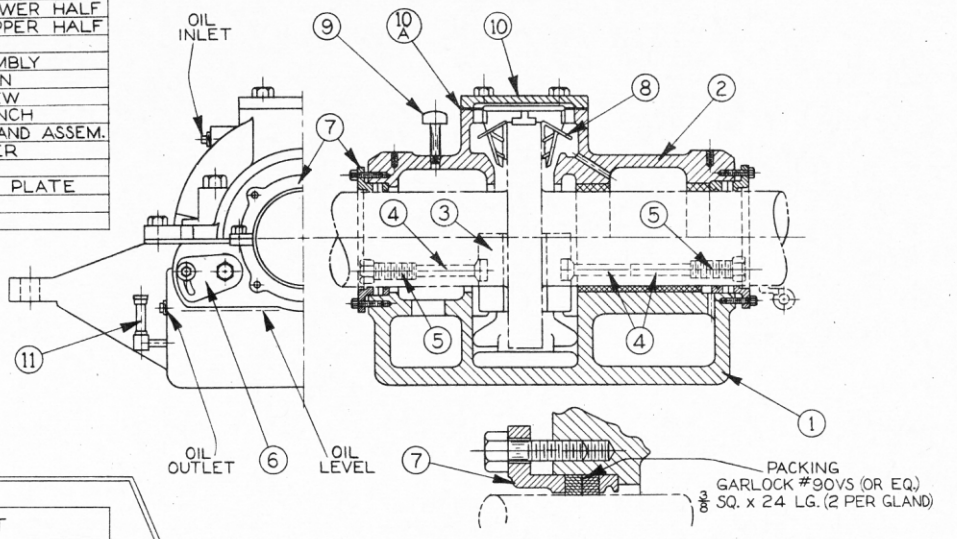

REF. NO.	NO. REQ.	PART
1	1	HOUSING-LOWER HALF
2	1	HOUSING-UPPER HALF
3	4	SHOE ASSEMBLY
4	6	THRUST PIN
5	4	JACK SCREW
6	4	LOCK WRENCH
7	2	PACKING GLAND ASSEM.
8	1	OIL SCRAPER
9	3	AIR VENT
10	1	TOP COVER PLATE
10A	1	GASKET
11	1	OIL GAUGE

BEARING COMPLETE PART NO. 2C135-P

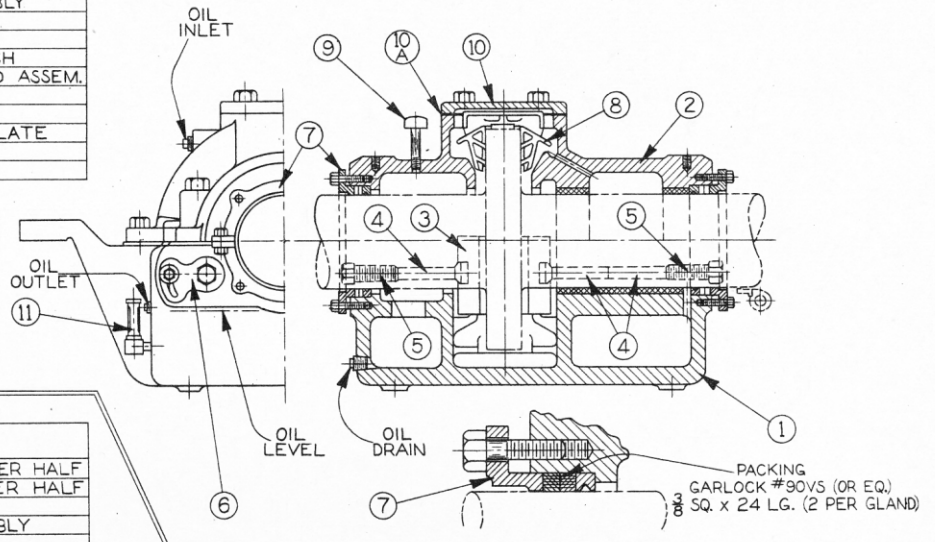

REF. NO.	NO. REQ.	PART
1	1	HOUSING-LOWER HALF
2	1	HOUSING-UPPER HALF
3	4	SHOE ASSEMBLY
4	6	THRUST PIN
5	4	JACK SCREW
6	4	LOCK WRENCH
7	2	PACKING GLAND ASSEM.
8	1	OIL SCRAPER
9	3	AIR VENT
10	1	TOP COVER PLATE
10A	1	GASKET
11	2	SIDE COVER PLATE
11A	1	GASKET
12	2	END COVER PLATE
12A	1	GASKET
13	1	OIL GAUGE

BEARING COMPLETE PART NO. C-9229-P

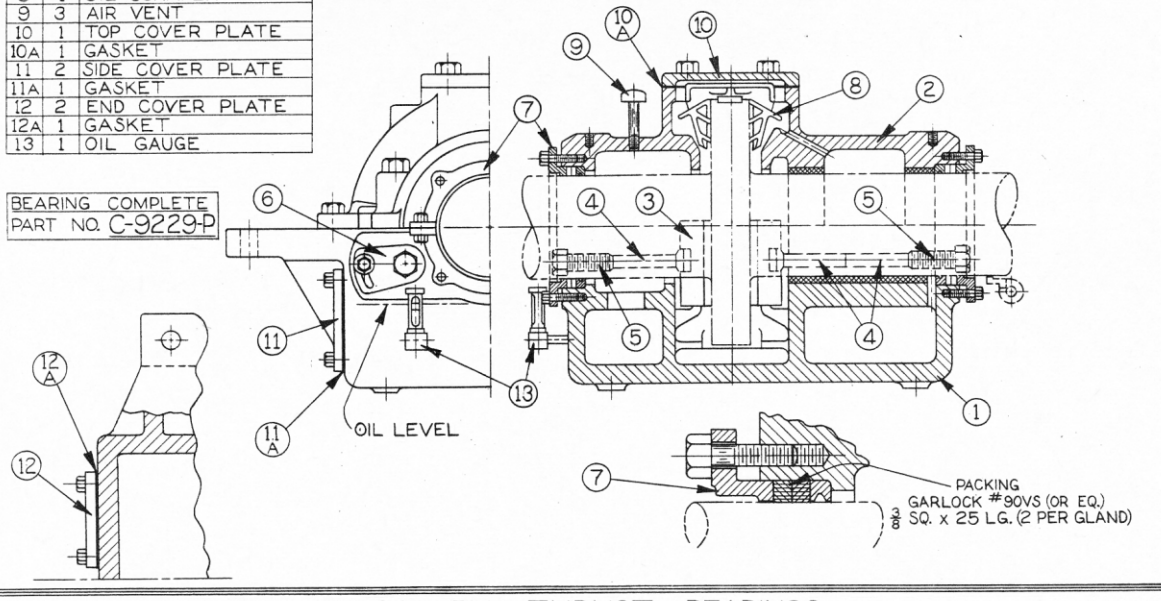

KINGSBURY THRUST BEARINGS

NOTE —— WHEN ORDERING PARTS
1. GIVE PART NUMBER OF COMPLETE BEARING AS LISTED ON GROUP SHEET
2. GIVE REF. NUMBERS & NAMES OF PARTS REQUIRED FROM PROPER TABULATION ABOVE

(PLATE) W-1991

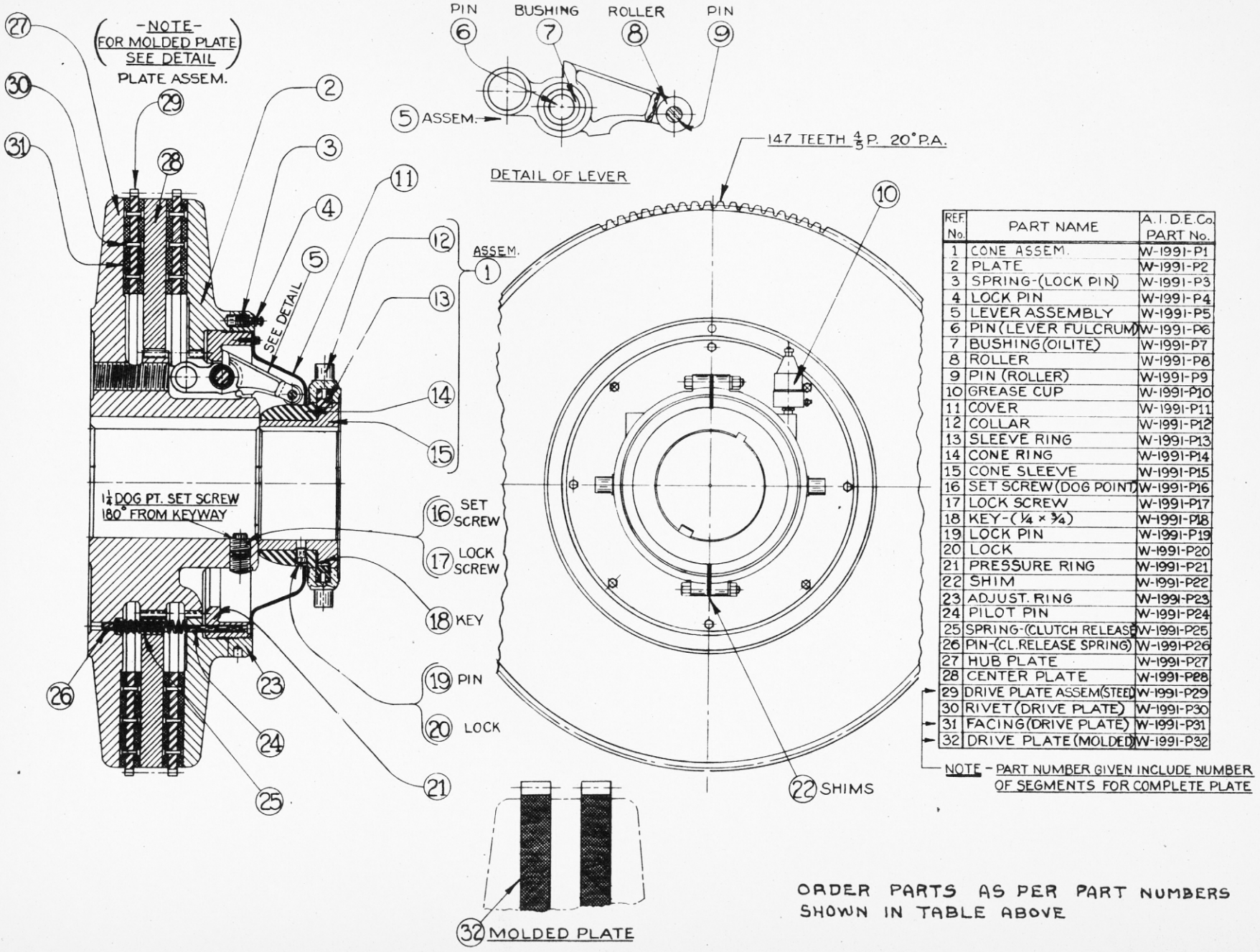

REF. No.	PART NAME	A.I.D.E.Co. PART No.
1	CONE ASSEM.	W-1991-P1
2	PLATE	W-1991-P2
3	SPRING-(LOCK PIN)	W-1991-P3
4	LOCK PIN	W-1991-P4
5	LEVER ASSEMBLY	W-1991-P5
6	PIN (LEVER FULCRUM)	W-1991-P6
7	BUSHING (OILITE)	W-1991-P7
8	ROLLER	W-1991-P8
9	PIN (ROLLER)	W-1991-P9
10	GREASE CUP	W-1991-P10
11	COVER	W-1991-P11
12	COLLAR	W-1991-P12
13	SLEEVE RING	W-1991-P13
14	CONE RING	W-1991-P14
15	CONE SLEEVE	W-1991-P15
16	SET SCREW (DOG POINT)	W-1991-P16
17	LOCK SCREW	W-1991-P17
18	KEY-(1/4 × 3/4)	W-1991-P18
19	LOCK PIN	W-1991-P19
20	LOCK	W-1991-P20
21	PRESSURE RING	W-1991-P21
22	SHIM	W-1991-P22
23	ADJUST. RING	W-1991-P23
24	PILOT PIN	W-1991-P24
25	SPRING-(CLUTCH RELEASE)	W-1991-P25
26	PIN-(CL. RELEASE SPRING)	W-1991-P26
27	HUB PLATE	W-1991-P27
28	CENTER PLATE	W-1991-P28
29	DRIVE PLATE ASSEM (STEEL)	W-1991-P29
30	RIVET (DRIVE PLATE)	W-1991-P30
31	FACING (DRIVE PLATE)	W-1991-P31
32	DRIVE PLATE (MOLDED)	W-1991-P32

NOTE - PART NUMBER GIVEN INCLUDE NUMBER OF SEGMENTS FOR COMPLETE PLATE

ORDER PARTS AS PER PART NUMBERS SHOWN IN TABLE ABOVE

INSTRUCTION BOOK
and
REPAIR PARTS LIST

Model 50

MADISON-KIPP LUBRICATOR

MADISON-KIPP CORPORATION
Madison, Wisconsin, U. S. A.

The **MODEL 50** pumping unit illustrated in Figure 1 embodies a mechanical motion so ingenious as to deserve your special attention. The driving eccentric imparts to both forcing and metering plungers a reciprocating movement for pumping and an oscillating movement for valving. The angle of the eccentric ring groove is 27°. When the eccentric makes a complete revolution, the plungers make a total swing of 54°. The reciprocating movement or lift is .212″. Oil intake and outlet ports register with grooves in the plungers as they travel their cycle.

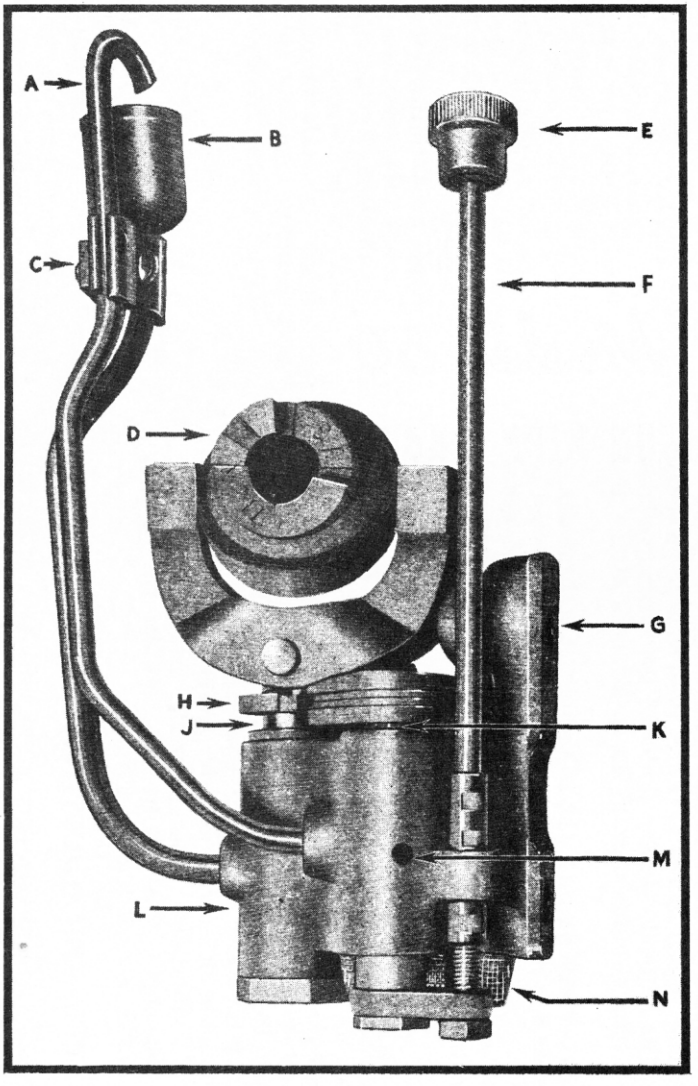

A Sight Feed Tube which shows the amount of oil in drops according to the oil delivery adjustment setting.

B Sight Feed Oil Cup.

C Tube Clamps tying the tubes "A" and "B" together.

D Eccentric to impart the reciprocating and oscillating movement to the plungers *(See first paragraph above)*.

E Adjusting Button to regulate the amount of oil to be delivered per feed impulse.

F Adjusting Spindle.

G Oil Outlet from pumping unit.

H Gear for oscillating and lifting metering plunger in unison with forcing plunger.

J Plunger which forces the measured quantities of oil to the feed outlet.

K Metering Plunger which delivers oil to the sight feed cup.

L Body of pumping unit.

M By-Pass Opening—oil not delivered to the sight feed cup is by-passed back to the reservoir.

N Fine Strainer located at oil inlet of pumping unit.

Figure 1

INSTRUCTIONS FOR ATTACHING, OPERATING AND CARE OF MADISON-KIPP LUBRICATORS.

Madison-Kipp Model 50 Lubricators are built on one standard design, of any required size and number of feed outlets, and are applied universally to all types of steam, oil, and gas engines, steam pumps, air compressors, steam hammers, shovels, dredges and cranes, marine engines, steering engines, drilling engines, agricultural tractors, grain separators, machine tools, and special types of machinery.

The Sight Feed type is built with a visible feed and an individual fine adjustment for each pumping unit. The Blind Feed type is designed for service where fine adjustment and visible feed are not necessary. It can be adjusted, however, by means of employing different lengths on the ratchet arm.

Madison-Kipp Lubricators are built on the Kipp Valveless principle, which permits the pumping and forcing of oil without the use of ball and spring valves.

ATTACHING

The lubricator should be bolted down, using lock washers to prevent bolts from working loose. Try to avoid offset bends in the driving rod.

The driving arm should be clamped on the lubricator shaft so as to place the driving pawl located inside the lubricator in the center of the space available for the stroke. If possible, turn machine over by hand to check stroke and clearance.

The standard lubricator is provided with a 44-tooth ratchet wheel and would require 44 strokes to complete one revolution of the lubricator if connected to engage with one tooth of the ratchet per stroke. The recommended speed varies from four to twenty revolutions per minute, depending on the type and size of machine to be lubricated.

Oil Leads

Lubricators can be furnished with connections for either ¼" O.D. copper or brass tubing, or for ⅛" or ¼" iron pipe. Where many turns and bends are necessary, the copper or brass tubing is preferable. The tubing or pipe should be clean, ends free from burrs and cut to a length which will allow the connections between the lubricator and point to be lubricated to be as direct as possible. Care should be taken when bending tubing to avoid flattening, which would restrict the flow of oil. All joints should be tight, and tubing or pipe should be anchored securely to machine to avoid vibration. Where possible, arrange tubing to prevent exposure to the extreme cold. In making the joint, let the tubing extend through the ferrule into the connection at least ⅛".

OPERATION AND ADJUSTMENT

Fill the lubricator with *clean* oil and turn hand crank until each of the oil leads are filled with oil. At this time make an inspection of all the connections to see that no leaks occur.

Adjustment or regulation of the quantity of oil to be delivered for each revolution of the unit is accomplished by turning the adjusting button, located on the cover (Part C-880-A). Turning to the right (clockwise) decreases, and to the left (counter-clockwise) increases the amount of oil being forced to the point to be lubricated. Observation can be made through the transparent hood to see the amount delivered by each feed. A very close adjustment may be had. Turning the lubricator by means of the hand crank when making adjustment is recommended. When lubricator is first applied, it is recommended as a safe practice to leave lubricator set for maximum delivery of oil, cutting it down gradually with care if an oversupply is noted at the points to be lubricated.

CARE OF LUBRICATOR

The Madison-Kipp pumping unit is made of very accurately machined parts which function coördinately, contains no troublesome check valves and springs and for this reason requires no attention after final feed adjustments have been made, other than the care necessary to keep dirt out of the lubricator.

Field operators, while perhaps not intentionally careless, often make no provision for keeping oil containers, funnels, etc., free from dust and dirt. As foreign matter so collected is likely to find its way into the lubricator tank, it is recommended as standard practice to drain the oil out of the lubricator and clean out the reservoir with kerosene every thirty to ninety days, depending on usage. The following are our suggestions for attention at regular intervals:

Use only clean oil.

Keep the lubricator full of oil.

See that all connections are tight.

See that the oil pipes are supported where excessive vibration is developed.

See that the lubricator is securely bolted down.

Inspect lubricator to see that filler cup strainer has not been removed. This part should be taken out for cleaning purposes only.

Keep the sight feed hood clean.

Cleaning

1. To clean out reservoir or repair lubricator, it is necessary to remove lubricator from the engine by unscrewing the oil tube connections, loosening the driving arm and unscrewing the bolts at the bolting brackets.

2. Remove cover by first unscrewing all cover screws and then lifting the cover off with the aid of a screw driver used as a pry.

3. Remove drain plug and drain oil from lubricator reservoir.

The lubricator can then be thoroughly washed out with kerosene. Do not operate the lubricator any more than necessary while washing and see that all kerosene is removed before filling with fresh oil.

DISASSEMBLING AND ASSEMBLING

If it is desired to disassemble the lubricator for any reason, proceed as follows after removing cover:

1. Drive out the split end taper pin which is driven through the shaft next to the ratchet wheel.
2. You can now remove the shaft as far as desired by pulling the hand crank.
3. Loosen bearings at each end of the reservoir by unscrewing the check nut on the inside of the reservoir.
4. To remove the pumping unit, remove the connector to which the oil pipe was attached and the cap screw below this connector, both of which are located on the outside of the reservoir. With these screws removed and the shaft pulled out beyond the unit to be removed, the pumping unit can be lifted out.

If the plunger is removed from pumping unit, be sure it is replaced in the same barrel from which it was taken, as these parts are ground to an individual selective fit and are not interchangeable.

To assemble, reverse the above operation, and put together, being sure that all screws are tight and check nuts in place.

The eccentric clutch jaws are so designed that they can be assembled only the correct way.

Assemble eccentric and strap so that the part marked "R" is to the right when facing the flat surface of the unit which is applied to the side of the reservoir.

When putting on the cover, it is necessary to see that the flats of the adjusting spindle are all in the same position as the flat depressions in the adjusting buttons. The cover can then be pressed on very readily. Do not drive or force cover in place.

Before reattaching lubricator to machine, it would be well to fill the lubricator and check the quantity of oil being delivered, for during the cleaning and repairing operation it is possible that the adjustment was changed. Do this by noting the quantity of oil delivered through the sight feed tubes at one turn of the hand crank.

SHAFT BEARINGS

The shaft bearings are each provided with an adjustable stuffing box gland and check nut. Should a leakage develop at these points, unscrew the gland, put in a length of string packing, and replace gland, being careful to have check nut drawn up tight.

The pumping unit itself requires no packing.

REPLACING GAUGE GLASS

To replace tubular gauge glass, after removing cover as instructed above, unscrew gauge glass plug screw, remove old gauge glass, and replace with new glass and new washers.

The bull's-eye design of gauge glass can be readily replaced from the outside without removing cover.

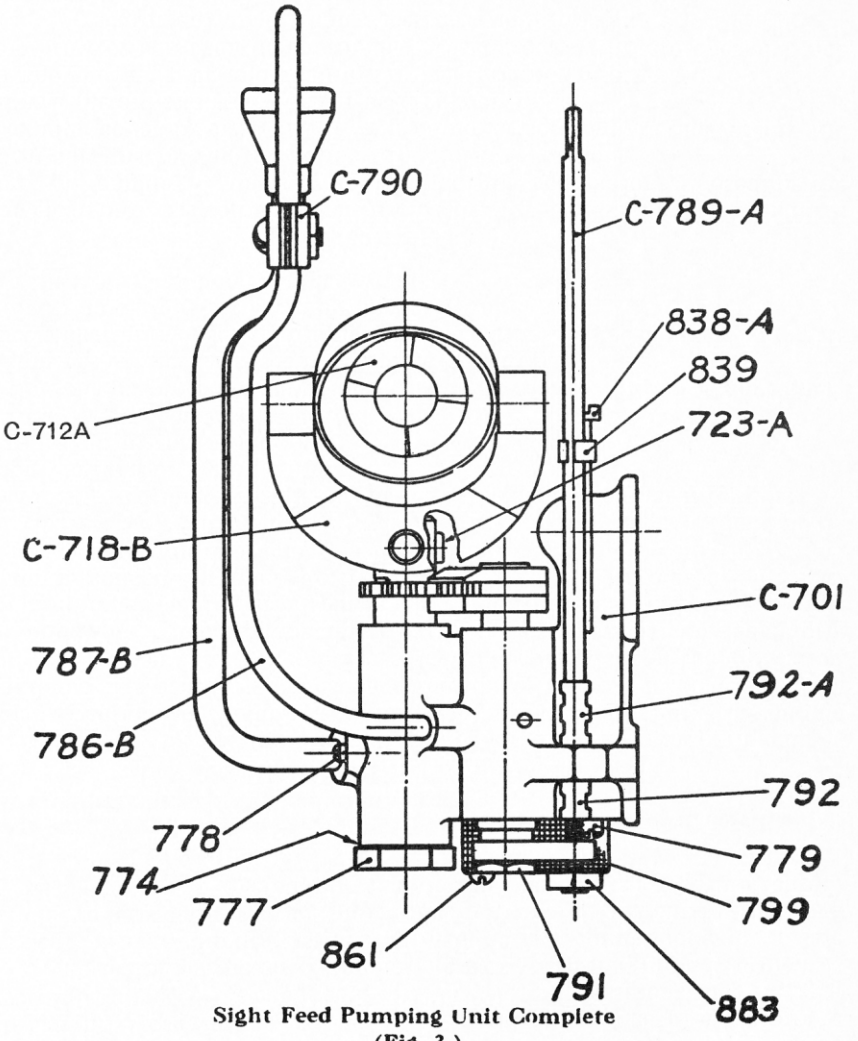

Sight Feed Pumping Unit Complete
(Fig. 3.)

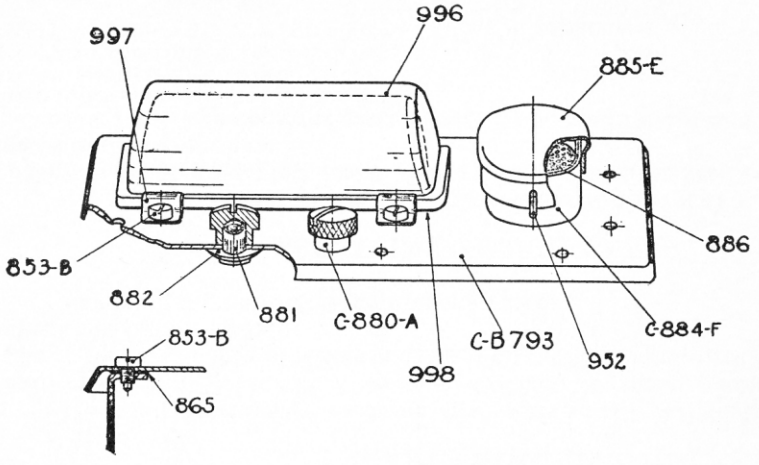

Sight Feed Lubricator Cover. Symbol C—B793. Having Glass Hood L. H. as illustrated
(Fig. 7.)

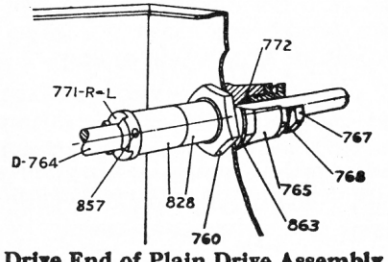

Drive End of Plain Drive Assembly. R. H. Assembly as Shown.
(Fig. 5.)

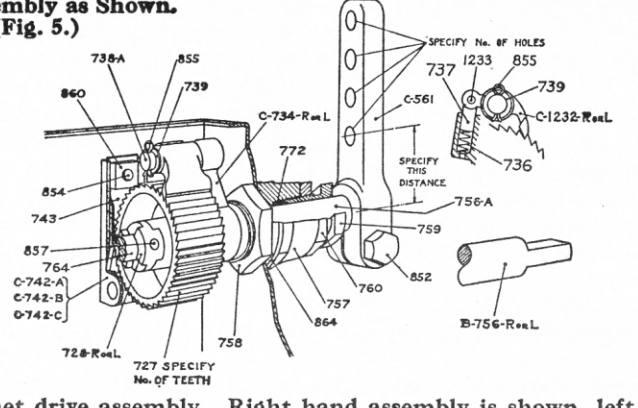

End ratchet drive assembly. Right hand assembly is shown, left hand would be on opposite end of reservoir.

(Fig. 10.)

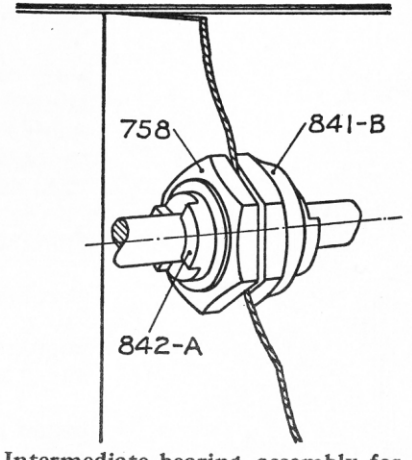

Intermediate bearing assembly for *single compartment* lubricators (New Style).

(Fig. 16.)

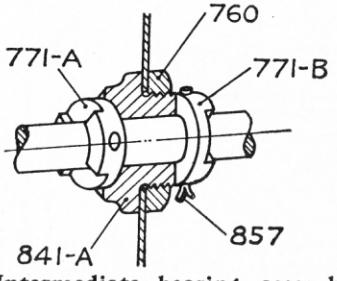

Intermediate bearing assembly for *single compartment* lubricators (Old Style).

(Fig. 17.)

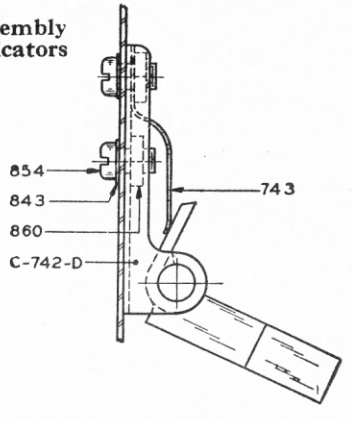

Weighted Retainer Pawl Assembly.

(Fig. 18.)

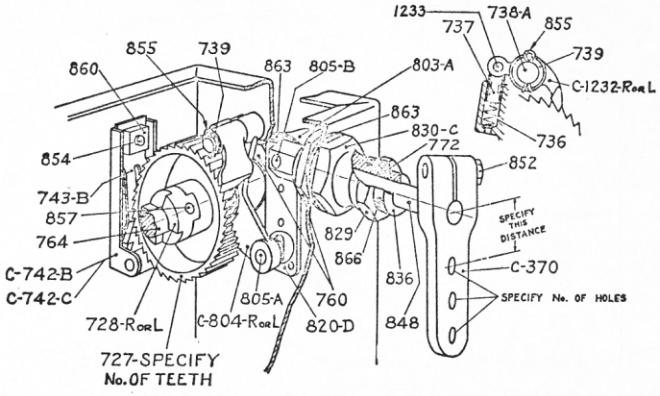

Front side ratchet drive assembly. Right hand assembly is shown, left hand would be on same side at opposite end of reservoir.

(Fig. 9.)

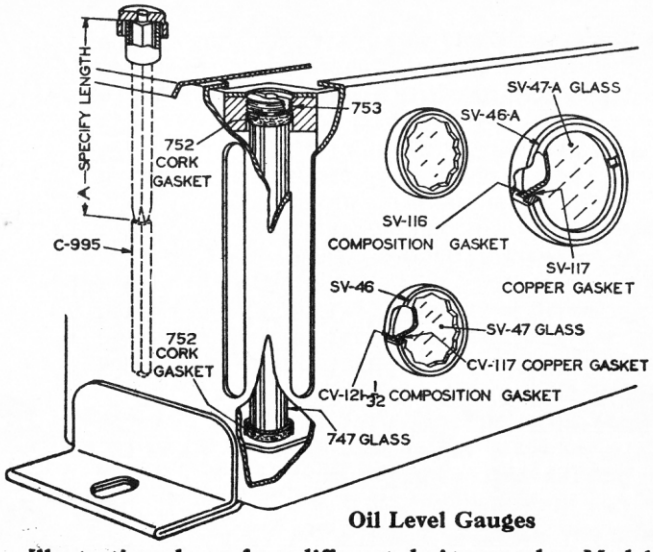

Oil Level Gauges

Illustration shows four different designs used on Model 50 Lubricator. When ordering specify symbol numbers of parts required.

(Fig. 19.)

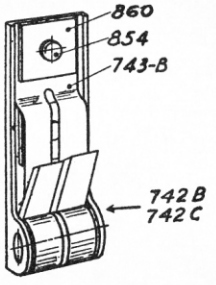

Retainer Pawl Assembly for Double Pawl (Fig. 20.)

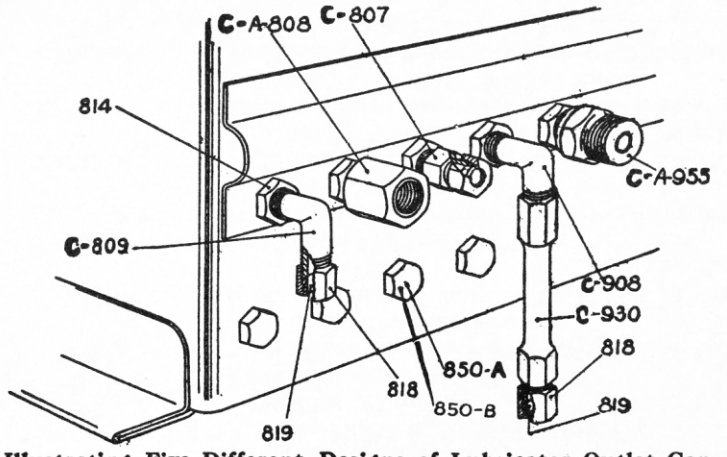

Illustrating Five Different Designs of Lubricator Outlet Connections. When Ordering Specify Symbol Number of Part Required.

(Fig. 38.)

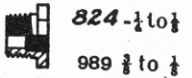

Pipe Size Bushing (Fig. 39.)

Compression Nut (Fig. 40.)

Single Cone Ferrule (Fig. 41.)

Double Cone Ferrule (Fig. 42.)

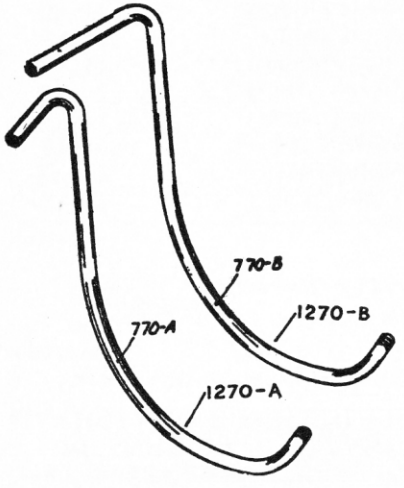

Side Ratchet and Rotary Drive Bearing Oiling Tubes

Tubes 770 A & B are for right hand drive lubricators. Tubes 1270 A & B are for left hand drive lubricators—see parts description for tube necessary for different types of drives.

(Fig. 26.)

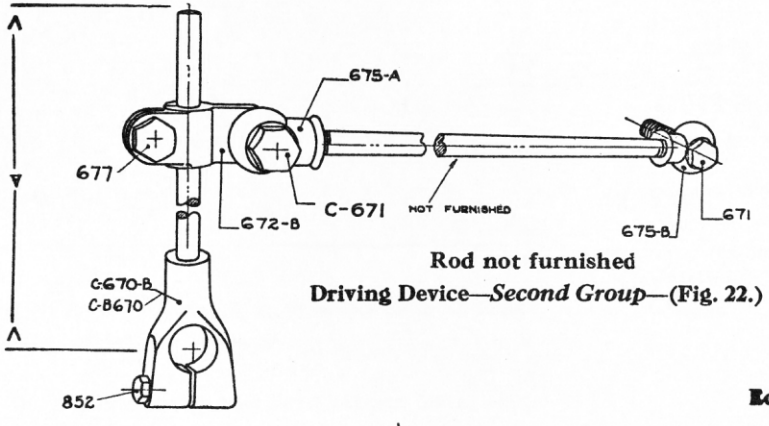

Rod not furnished

Driving Device—*Second Group*—(Fig. 22.)

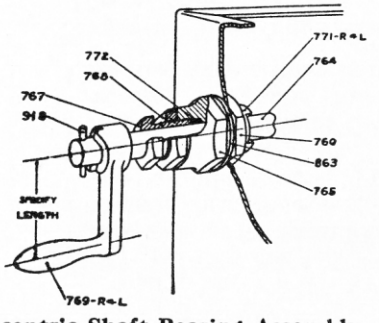

Eccentric Shaft Bearing Assembly. Left hand as illustrated

(Fig. 45.)

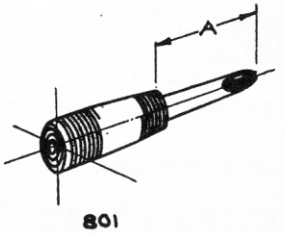

801

Standard Quill (Fig. 36.)

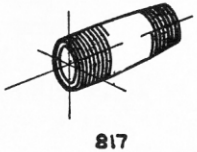

817

Nipple (Fig. 37.)

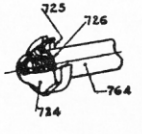

Hand Crank Shield (Fig. 47.)

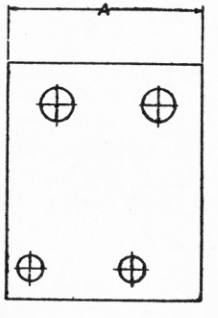

720

Unit Gasket (Fig. 46.)

Directions for Ordering Repair Parts

All parts of the Model 50 Lubricator are clearly illustrated and numbered on the preceding pages.

Locate the part wanted in the illustrations to obtain the part number. Names and prices are given on the pages following illustrations.

BE SURE TO GIVE PART NUMBER, NAME AND OTHER INFORMATION ASKED FOR UNDER THE NUMBER OF THE PART WANTED.

Parts are furnished only as listed. Pumping unit and plungers are never sold separately.

Prices are subject to change without notice.

Sales, use, or other taxes imposed on these products shall be borne by purchaser.

Symbol	Name	Price
CV- 16	Union Nut	$ .30
SV- 46	Glass Clamp Screw for SV-47	.25
SV- 46A	Glass Clamp Screw for SV-47-A	.40
SV- 47	Gauge Glass Disc 1 3/64" Diameter	.20
SV- 47-A	Gauge Glass Disc 1 3/32" Diameter	.25
SV-116	Composition Gasket for SV-47-A	.10
SV-117	Copper Gasket for SV-47-A	.15
CV-117	Copper Gasket for SV-47	.10
CV-121 1/32	Composition Gasket for SV-47	.05
CV-233	Terminal Check valve plug	$ .20
C-370	Drive Arm complete with 852 screw. Specify distance indicated on cut and number of holes	1.20
C-561	Drive Arm complete with 852 screw. Specify distance as indicated on cut and number of holes	1.00
C-561-D	Drive Arm weight, complete with set screw	.75
C-575-A	Blind Feed Pumping Unit complete as illustrated. Plunger and barrel never furnished separately	6.00
580-B	Unit Test Tube	.25
581	Unit Test Tube Spout	.15
582-A	Unit Test Tube Spout Screw	.10
C-B-670	Adjustable Drive Arm with 852 screw for 1/2" Dia. shaft. Specify Dimension "A"	2.00
C-670-B	Adjustable Drive Arm with 852 screw for 3/4" Shaft. Specify Dimension "A"	2.25
671	Adjustable Drive Arm Bolt	.20
C-671	Adjustable Drive Arm Bolt with nut and washer	.30
672-B	Sliding Head	1.10
675-A	Adjustable Drive Arm Swivel	.50
675-B	Adjustable Drive Arm Swivel	.50
677	3/8" x 3/4" Hex Head Cap Screw for 672-B	.10
C-678	Connecting Rod Clamp complete with set screw	1.50
700	Sight and Blind Feed Lubricator Tanks (Not illustrated) See footnote before ordering:	
	1 and 2 feed sizes	$8.00
	3 and 4 feed sizes	9.00
	5 and 6 feed sizes	10.00
	7 and 8 feed sizes	12.00
	9 and 10 feed sizes	14.00
	11 and 12 feed sizes	16.00
	Prices of larger sizes on application.	
C-701	Pumping Unit for Sight Feed. Complete as illustrated	7.50
C-A-701-R	Pumping Unit same as C-701 except has 770 Drive bearing oiling tube. For right hand drive lubricators	7.75
C-A-701-L	Pumping Unit same as C-701 except has 1270 Drive bearing oiling tube. For left hand drive lubricators	7.75
C-712-A	Eccentric for pumping unit (Consisting of 2 pieces)	.75
C-718-B	Eccentric Strap Yoke Assembly less C-712 eccentric	$ 1.00
720	Gasket. Specify Dimension "A"	.10
723-A	Eccentric Yoke Knuckle Pin	.05
724	Hand Crank Pin Shield	.20
725	Hand Crank Pin for use with 724	.05
726	5/16" Lock washer for 724	.05
727	Ratchet wheel. Specify number of teeth	1.50
728-R. or L.	Drive Collar. Specify whether lubricator has right or left hand drive. Right hand is illustrated	.50
C-734-R. or L.	Paul Carrier Arm complete with 756-A and 738-A stud. Right hand is illustrated	1.00
736	Pawl Plunger Spring	.10
737	Pawl Plunger	.10
738-A	Stud. Furnished only with C-734 R. or L. and C-804 R. or L. Pawl carrier arms	
738-B	Stud. Furnished only with C-806 R. or L. Pawl Carrier Arm	
739	Pawl Stud Washer	.05
C-742-A	Retainer pawl assembly complete with stud and single pawl	1.00
C-742-B	Retainer Pawl Assembly complete with stud and two pawls for 44 and 88 tooth ratchet wheel	1.00
C-742-C	Retainer Pawl Assembly complete with stud and two pawls for 66 tooth ratchet wheel	1.00
C-742-D	Retainer Pawl Assembly with weighted pawl	1.50
743	Spring for single pawl retainer	.10

Symbol	Name	Price
743-B	Spring for double pawl retainer	.20
747	Tubular Gauge Glass	.30
752	Gasket upper and lower for 747 gauge glass	.05
753	Plug screw for 747 gauge glass	.05
756-A	Drive Shaft, Furnished only with C-734 R. or L.	
B-756	Drive Shaft with milled end furnished only with C-734 R. or L. (Specify milled end shaft if required)	
757	Drive Shaft Bearing	.85
758	Bearing lock nut	.20
759	Bearing Gland	.25
760	Bearing and Gland Lock Nut	.20
761	Washer for 762 and C-981	.05
C-762	Stud for 763 with nut, washers and cotter key	.30
763	Strap and connection complete. Specify Dimension "A"	.85
764	Eccentric Shaft. Specify length and if for hand crank shield	1.00
D-764	Eccentric Shaft for plain drive lubricator. Specify length and if for hand crank shield. Illustrated Figure 5	1.00
765	Hand Crank Bearing	.70
766	Spacing Washer ¾" O.D. x ½" I.D. x $\frac{1}{64}$" to ⅛" thick (Not illustrated)	.05
767	Eccentric Shaft Bearing Gland	.20
768	Eccentric Shaft bearing gland lock nut	.10
769–R. or L.	Hand Crank. Specify length of crank and whether for right or left hand drive lubricators	$ .40
770-A	Drive Bearing Oiling Tube for side ratchet and side rotary drive lubricators. For right hand drive only	.25
770-B	Drive bearing oiling tube for end rotary drive lubricators. For right hand drive only	.25
771–R. or L.	Spacing Collar. Specify whether lubricator has right or left hand drive	.30
771-A	Spacing collar for drive side of partition. Specify whether for right or left hand drive lubricators	.30
771-B	Spacing collar for crank side of partition. Specify whether for right or left hand drive lubricators	.30
772	Stuffing box packing	.05
774	Copper gasket for 777	.05
777	Plug for plunger hole	.10
778	No. 8 x 32 Brass Plug	.05
779	¼" x 32 Brass Plug	.05
786-B	Sight Feed Tube	.20
787-B	Oil Receiving tube complete with cup	.40

Symbol	Name	Price
C-789-A	Adjusting Spindle with 792, 792-A and 883	.20
C-790	Tube Clamp for single unit, complete with bolt and nut	.10
C-790-A	Tube clamp for binding together more than one unit. Specify how many. Complete with nuts and bolts	.40
791	Plug for adjusting sleeve	.10
792	Adjusting spindle collar (Lower)	.05
792-A	Adjusting spindle collar (Upper)	.05
C-A-793–R. or L. C-B-793–R. or L.	Sight Feed lubricator covers complete as illustrated. Specify whether for right or left hand drive lubricator, length of lubricator tank, if for single or double compartment specify the number of feeds in each compartment. If single compartment of over six feeds specify number of intermediate bearings or number of sight feed hoods and also number of screw holes in cover. NOTE: The covers as illustrated show both old (C-A-793) and new (C-B-793) Covers. These covers are not interchangeable and therefore be sure to specify correct number of cover wanted as well as all information requested.	
	1 and 2 feed sizes	3.50
	3 and 4 feed sizes	4.00
	5 and 6 feed sizes	5.00
	7 and 8 feed sizes	6.50
	9 and 10 feed sizes	8.00
	11 and 12 feed sizes	10.00
	Prices of larger sizes on application	
799	Oil Strainer for pumping unit	.20
801	Nipple complete with quill. Specify dimension "A".	1.00
803-A	Blind Bearing	.70
C-804–R. or L.	Pawl carrier arm for front side ratchet drive complete with parts 738-A, 805-A, 805-B, 820-D and 848 shaft. Specify whether right or left hand drive. See illustration Fig. 9	2.50
805-B	Furnished only with C-804 R. or L. and C-A-804 R. or L.	
C-806–R. or L.	Pawl carrier arm for end belt drive complete with 738-B Stud. Specify if for right or left hand drive	1.10
C-807—¼"	Straight tube connector WITHOUT CHECK complete with 814, 818 and 819 for ¼" O.D. Tube	.50
C-A-807¼	Straight tube connector WITH CHECK complete with 814, 818 and 819 for ¼" O. D. Tube	.70

Symbol	Name	Price
C-809–¼	Angular barrel clamp connector WITHOUT CHECK. Complete with 814, 818 and 819 for ¼″ O.D. Tubing	.80
C-A-809–¼	Angular barrel clamp connector WITH CHECK. Complete with 814, 818 and 819 for ¼″ O.D. Tubing	1.10
814	Connector check nut	.10
817	Nipple for 900 check valve	.10
818	Cinch nut for single cone ferrule. Specify outside diameter of tubing	.05
A-818	Double cone cinch nut	.05
819	Single cone ferrule. Specify diameter of tubing	.05
A-819	Double cone ferrule. Specify diameter of tubing	.05
828	Spacing collar ⅛″ O.D. x ½″ I.D. Specify length	.20
829	Stuffing box	.45
836	Set collar	.10
838-A	Minimum adjusting spindle	.10
839	Minimum adjusting spindle spring	.05
840	Spring for A-810 and A-811 (Not illustrated)	.05
841-A	Intermediate bearing ½″ bore	.60
841-B	Intermediate bearing $\frac{15}{16}$″ bore	.65
841-C	Partition bearing	.60
842-A	Spacing collar for 841-B intermediate bearing	.70
842-B	Spacing collar for two compartment partition bearing	.70
843	Gasket for 854	.05
846	Nut for 841-C	.70
847	Packing ring	.20
848	Eccentric driving shaft. Furnished only with 804 R. or L. for side ratchet drive	
849	Bearing packing	.05
850-A	$\frac{5}{16}$″-18 x ⅜″ Hex head cap screw	.05
850-B	$\frac{5}{16}$″-18 x $\frac{7}{16}$″ Hex head cap screw	.05
852	⅜ x 1⅜″ Hex head cap screw	.10
853	Cover screw ¼″ Diameter	.05
853-B	Cover screw $\frac{3}{16}$″ Diameter	.05
854	¼ x ⅜ Round head cap screw	.05
855	$\frac{3}{32}$ x ½″ Spring cotter	.05
857	No. 1 x 1¼″ Split end taper pin	.05
858	No. 1 x ¾ taper pin (Not illustrated)	.05
859	$\frac{3}{16}$″ Steel ball for A-807, A-809 and C-900	.05
860	¼-20 Standard square nut	.05
861	Screw for 799	.05
863	1-$\frac{1}{16}$ I.D. Composition gasket	.05
864	1-$\frac{5}{16}$″ I. D. Composition gasket	.05
865	Cover gasket. Specify length wanted.	

Symbol	Name	Price
879	¼-20 Hollow head set screw	.15
C-880-A	Adjusting spindle head, complete with 881 and 882.	.20
883	$\frac{3}{16}$″-32 nut for 789	.05
884	Oval filler cup	.25
C-884-F	Oval filler cup complete with 885-E and 952	.50
884-H	Round filler cup (Not illustrated)	.50
C-885-A	Filler cup cover complete with chain	.30
885-E	Oval filler cup cover	.20
885-F	Round filler cup plug (Not illustrated)	.75
886	Oval filler cup strainer	.10
C-890	Swivel complete with washer, cotter and set screw	.45
891	Attachment arm. Specify dimension "A"	1.00
C-892	U Bolt with nuts	.20
C-A-900	Check valve complete ⅛″ I.P.S. both ends	1.75
C-B-900	Check valve complete ¼″ I.P. both ends	1.75
C-908	Angle barrel clamp connection complete with 814. Having ⅛″ male pipe thread both ends	.50
914	⅛″ I.P. Plug	.05
918	No. 1 x 1″ Taper pin	.05
927	Hinge Link	1.80
928	Hinge Link (Upper half)	1.90
C-929	Hinge Link Pin, complete with spring cotters	1.00
C-930	Extension adapter complete with 818 and 819	1.00
952	Filler cup hinge ring	.05
C-995	Oil Dagger gauge. Specify dimension "A"	.80
996	Glass Hood. Specify length overall, also, number of tubes covered by each glass required	
	1, 2 and 3 feed sizes	.50
	4 and 5 feed sizes	.75
	6 and 7 feed sizes	.80
	8 feed	1.00
997	Glass hood clamp	.10
998	Glass hood gasket. Specify length overall	.10
C-1232-R. or L.	Drive pawl with stud for right or left hand drive. Specify which	.90
1233	Pawl wing stud. Furnished only with C-1232 R. or L.	
1270-A	Drive bearing oiling tube for side ratchet and side rotary drive lubricators. For left hand drive only	.25
1270-B	Drive bearing oiling tube for end rotary drive lubricators. For left hand drive only	.25